TRSG ASSEMBLY INSTRUCTION MANUAL

P/N: C11746308

Yale® SHAW-BOX®

YK™, SK™, Y80 & 800 Series

CRANE KIT ASSEMBLY INSTRUCTION MANUAL

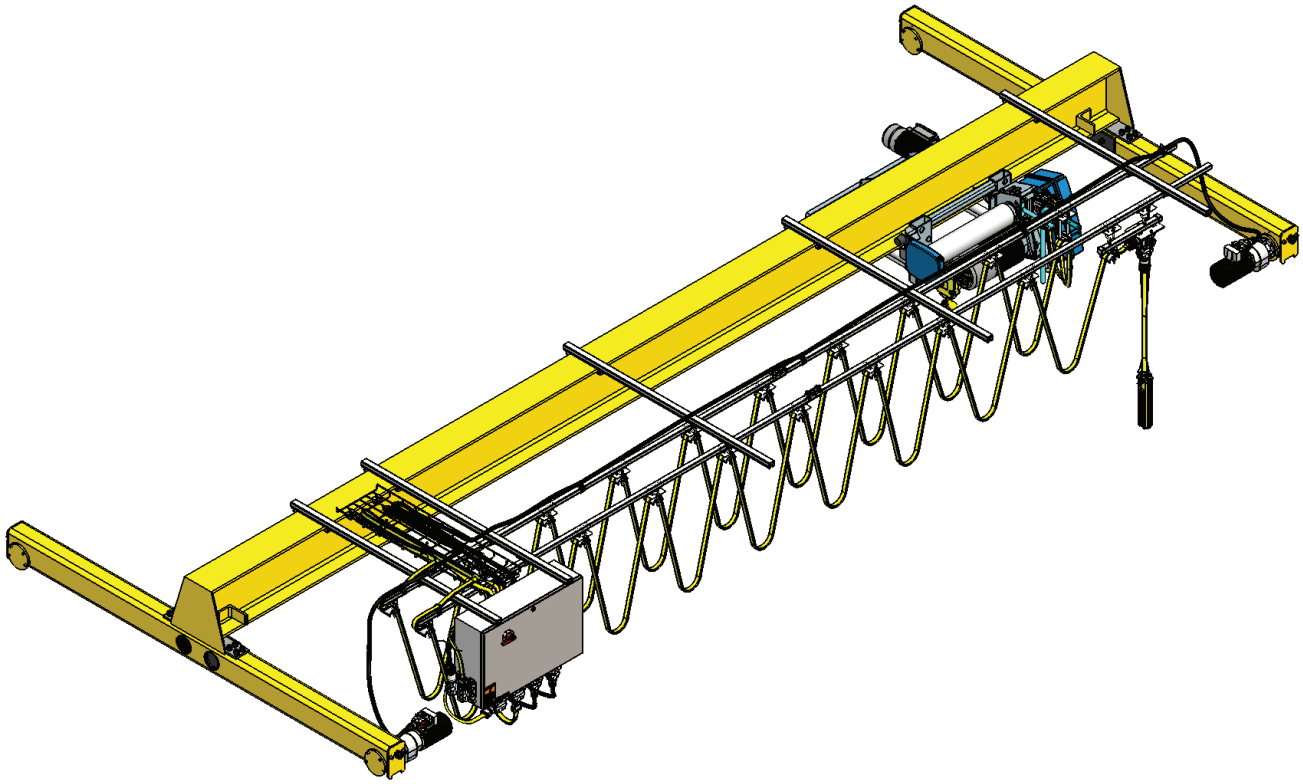

COLUMBUS McKINNON CORPORATION

P/N: C11746308 REV. AB June 2022

www.columbusmckinnon.com

TABLE OF CONTENTS

TABLE OF CONTENTS

CHAPTER 1

SAFETY PRECAUTIONS

Safety Alert Symbols

Throughout this manual are steps and procedures that can prevent hazardous situations; the following symbols are used to identify the degree or level of hazard seriousness.

DANGER, WARNING, CAUTION AND NOTICE

Symbol	Description
DANGER	**Danger** Indicates an imminently hazardous situation which, if not avoided, **will result in death or serious injury** and property damage.
WARNING	**Warning** Indicates an imminently hazardous situation which, if not avoided, **could result in death or serious injury** and property damage.
CAUTION	**Caution** Indicates a potentially hazardous situation which, if not avoided, **may result in minor or moderate injury** and property damage.
NOTICE	**Notice** Notifies people of installation, operation or maintenance information which is important but not directly hazard-related.

⚠ WARNING

Failure to read and comply with any of the limitations noted in this manual can result in serious bodily injury or death, and/or property damage.

IMPORTANT INFORMATION AND WARNINGS

- ✓ Failure to read and comply with any of the limitations noted herein can result in serious bodily injury or death, and/or property damage.
- ✓ Equipment described in this manual is not designed for and should not be used for lifting, supporting, or transporting humans.
- ✓ To ensure the good working order and reliable operation of your hoist, strictly adhere to the requirements for that installation provided in this manual.
- ✓ Strictly adhere to the requirements for safe operation to prevent danger to personnel and damage to the electric hoist.
- ✓ Repairs shall be completed only with parts supplied by the manufacturer.
- ✓ The connection of the bridge panel power cable to the crane runway power supply shall be completed only by a qualified electrician.
- ✓ Assembly and commissioning of the crane system shall only be done by qualified persons, authorized by CMCO.
- ✓ Modifications to upgrade, re-rate, or otherwise alter this equipment shall be authorized only by the original equipment manufacturer or qualified professional engineer.
- ✓ Equipment described in this manual may be used in the design and manufacture of cranes. Additional equipment or devices may be required for the crane to comply with applicable crane design and safety standards. The crane designer, crane manufacturer, or user is responsible for finishing these additional items for compliance. Refer ASME B30.2 Safety Standard for Top-Running Double-Girder Cranes. If a below-the-hook lifting device or sling is used with a hoist, refer to ASME B30.9, Safety Standard for Slings, or ASME B30.20, Safety Standard for Below-the-Hook Lifting Devices.
- ✓ Hoists and cranes used to handle hot molten material may require additional equipment or devices. Refer to ANSI Z241.2, Safety Requirements for Melting and Pouring of Metals in the Metalcasting Industry.
- ✓ The hoists are not designed to operate in a chemically aggressive and explosive environment.

Working in or near exposed energized electrical equipment presents the danger of electric shock.

⚠ WARNING

Before installing, removing inspecting, or performing any maintenance on a hoist, the main switch shall be de-energized. Lock and tag the main switch in the de-energized position in accordance with ANSI Z244.1.

Follow other maintenance procedures outlined in this manual and applicable ASME B30 volumes.

Additional WARNINGS are listed in various portions of this manual. Personnel shall read and follow these WARNINGS. Failure to read and comply with these WARNINGS as well as other instructions or any limitations noted in this manual and applicable ASME B30 volumes could result in serious bodily injury or death, and/or property damage.

- ✓ Read and observe the instructions and warnings contained in this manual. Read and observe any instructions and warning tags attached to the hoist.
- ✓ Check for any damage to the components during shipment. If any damage has occurred, place a claim with the carrier. DO NOT install damaged components.
- ✓ Check wire rope for damage and proper spooling on the drum. Be sure rope is properly seated in drum grooves and sheaves. Make sure both of the rope ends are tightly secured.
- ✓ After each rope replacement, as well as after repair and reassembling of the electric hoist, check the phasing and direction of operation. Verify the hook position of all limit switches per the hoist manual.
- ✓ Be certain that power supply to bridge control panel has the same voltage, frequency, and phase that are specified on the bridge control panel nameplate.
- ✓ Before performing maintenance and repair activities, make sure that there is no load on the hook, the power supply switch is turned off and unauthorized switching is prevented through lockout and tagout procedures.
- ✓ Check the load hook for cracks and deformations and verify proper operation of the release latch.
- ✓ The bridge frame shall not be considered electrically grounded through the end truck wheels and its respective tracks. A separate runway bonding conductor must be provided.

⚠ WARNING

Hazardous voltages are present in the control enclosure, other electrical components, and connections between these components.

Before performing any mechanical or electrical maintenance on the equipment, disconnect the main switch supplying power to the equipment and implement lockout/tagout procedure. Refer to ANSI Z244.1, personnel protection - lockout/tagout of energy sources.

DO NOT operate the equipment without control enclosure cover or covers in place.

Only trained and competent personnel should inspect and repair this equipment.

- ✓ If hoist has a trolley, check that the crane bridge beam is level, straight, and clean. Check that trolley stops are installed, or install trolley stops, at the open end or ends of the beam to prevent the trolley from traveling off the beam. Trolley stops that engage trolley wheels are not recommended. Check that trolley stops will prevent overhanging parts of the hoist and trolley from interfering with other equipment beyond the ends of the beam.
- ✓ Daily, before starting work, check the operation of the brake and the limit switches.
- ✓ Do not use a limit switch as an operational limit in any case.
- ✓ Do not leave the lifted load out of sight.
- ✓ Do not exceed the rated capacity.
- ✓ Do not lift loads at an angle and do not drag them.
- ✓ Do not try to detach firmly fixed loads (e.g., frozen to the ground).
- ✓ Do not change or modify the electric diagram. Do not use the pushbuttons and limit switches for other purposes but those indicated.
- ✓ Equipment covered herein is not designed or suitable as a power source for lifting or lowering persons. Lifting and moving of loads over personnel is not allowed.
- ✓ Warning signs and barriers shall be utilized on the floor beneath the crane or area where the hoist will be installed.

⚠ WARNING

Damage to the hoist, a droped load, and injury may result if limit switches fail due to improper use.

Under normal operating conditions,stop hoist travel before engaging limit switches. Limit switches are safety devices and should not be used as normal opertating control.

⚠ WARNING

Only qualified personnel with proper supervision shall install the hoist on the monorail and perform the final pre-operation inspection.

Before installing, removing, inspecting, or performing any maintenance on a hoist, the main switch shall be de-energized. Lock and tag the main switch in the de-energized position in accordance with ANSI Z244.1.

Follow other maintenance procedures outlined in the manual and applicable ASME B30 volumes.

Additional WARNINGS are listed in various portions of this manual. Personnel shall read and follow these WARNINGS. Failure to read and comply with these WARNINGS as well as other instructions or any limitations noted in this manual and applicable ASME B30 volumes could result in serious bodily injury or death, and/or property damage.

CHAPTER 2

FABRICATION OF GIRDER(S) FOR BRIDGE BEAM WITH CAPPING CHANNEL (AS REQUIRED)

STEP 1: CUT GIRDER AND C-CHANNEL (AS REQUIRED)

⚠ WARNING

Selection of structural steel beams must be verified by qualified engineer. IT IS IMPORTANT THAT ALL INSTRUCTIONS BE FOLLOWED AND THAT COMPONENT APPLICATION LIMITS NOT BE EXCEEDED.

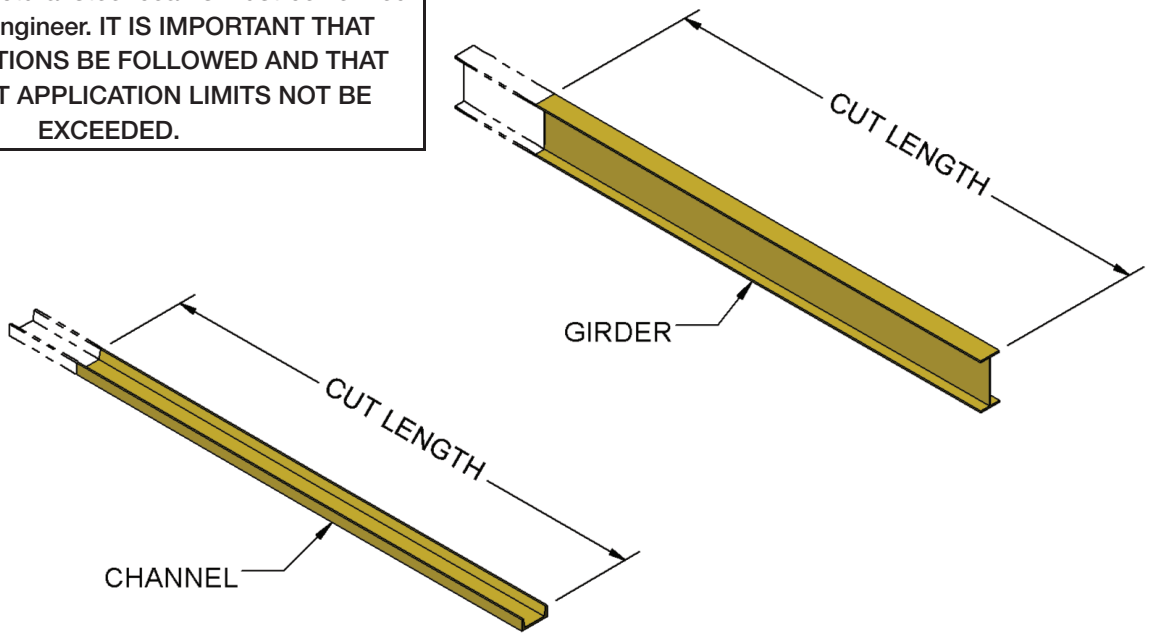

Check your configuration to see if a capping channel is required.

CUT LENGTH TO BE DETERMINED BY SPAN LENGTH

STEP 2: CHECK CAMBER (AS REQUIRED)

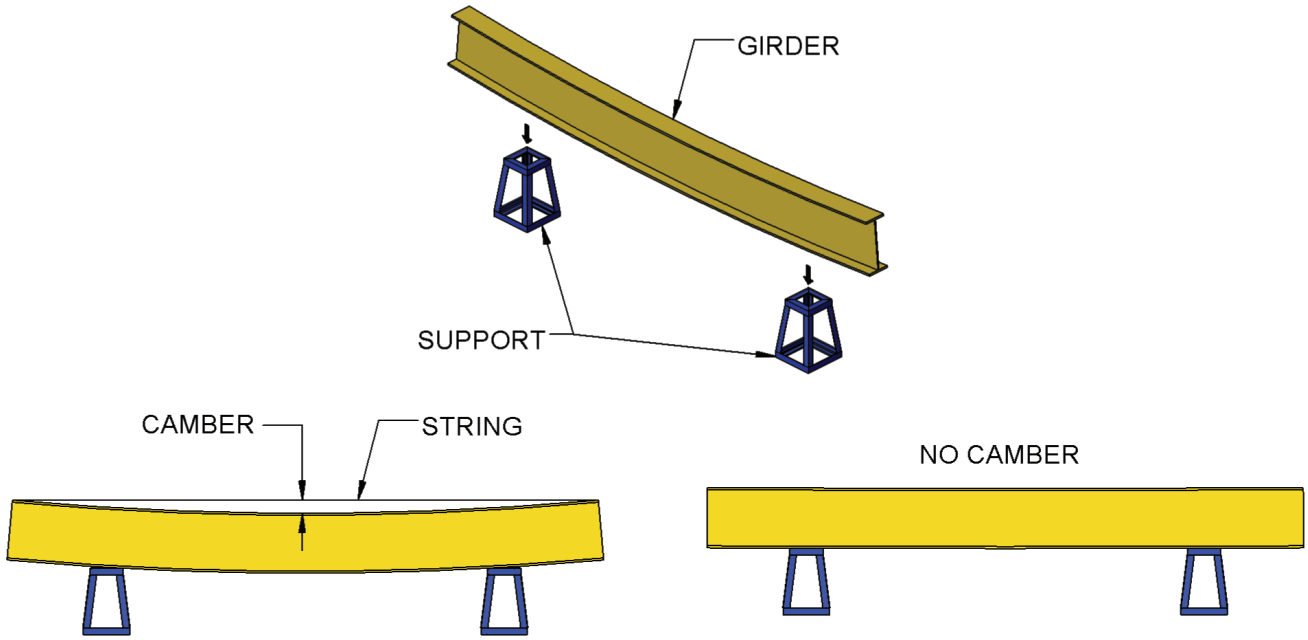

STEP 3: GIRDER AND C-CHANNEL WELDING AT END (AS REQUIRED)

NOTICE

Assembly of beam and channel requires welding. IT IS EXTREMELY IMPORTANT TO THE SAFETY OF THIS BRIDGE THAT THIS WELDING BE DONE BY A COMPETENT WELL-TRAINED WELDER. It is our strong recommendation that the welder used in this construction be qualified as prescribed by the American Welding Society (AWS) Structural Welding Code-Steel D1.1-2008 and Specification for Welding Industrial and Mill Cranes D14.1-2005.

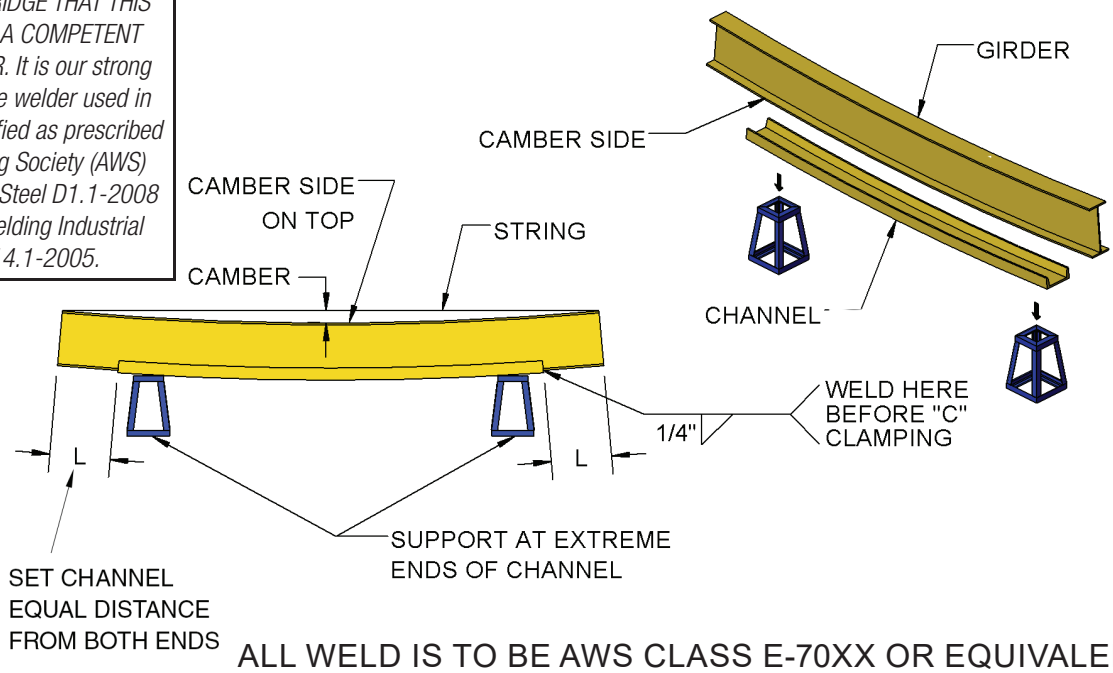

ALL WELD IS TO BE AWS CLASS E-70XX OR EQUIVALENT

STEP 4: CLAMPING GIRDER AND C-CHANNEL (AS REQUIRED)

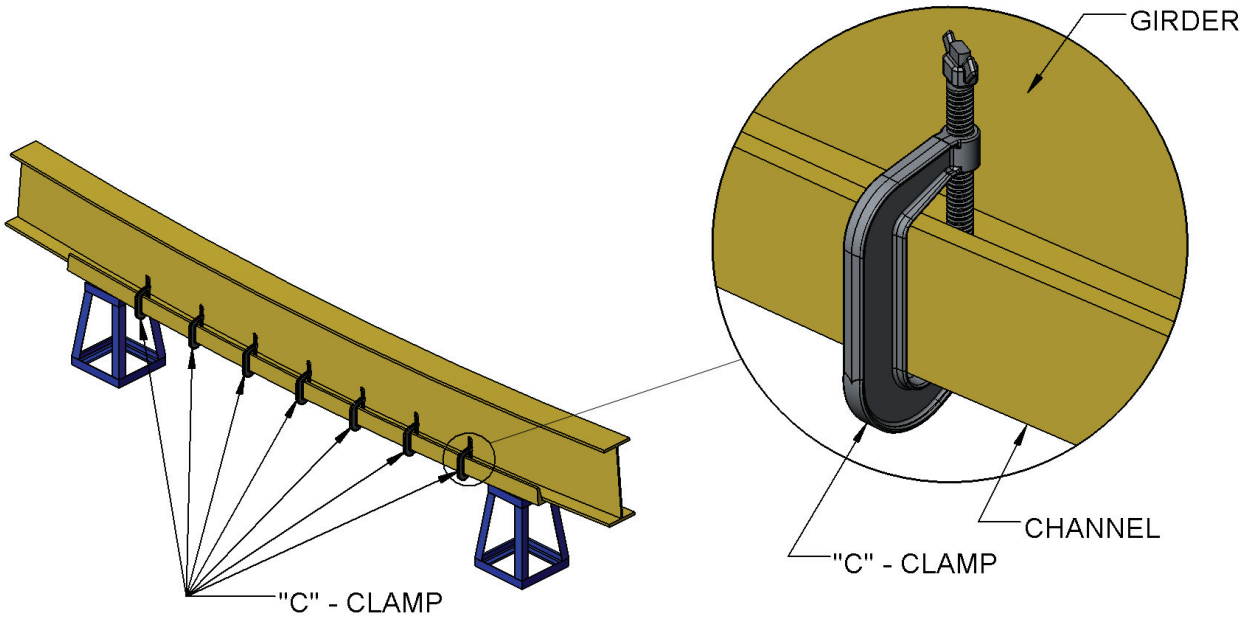

STEP 5: GIRDER AND C-CHANNEL WELDING (AS REQUIRED)

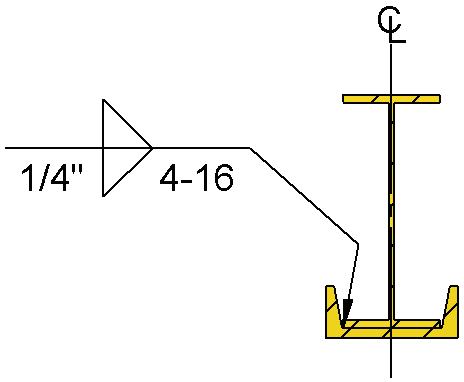

NOTICE

Assembly of beam and channel requires welding. IT IS EXTREMELY IMPORTANT TO THE SAFETY OF THIS BRIDGE THAT THIS WELDING BE DONE BY A COMPETENT WELL-TRAINED WELDER. It is our strong recommendation that the welder used in this construction be qualified as prescribed by the American Welding Society (AWS) Structural Welding Code-Steel D1.1-2008 and Specification for Welding Industrial and Mill Cranes D14.1-2005.

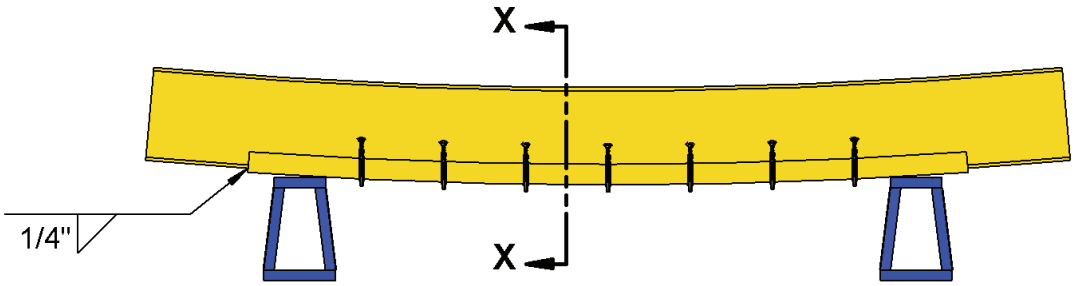

ALL WELD IS TO BE AWS CLASS E-70XX OR EQUIVALENT

STEP 6: CHECK CAMBER AFTER WELDING (AS REQUIRED)

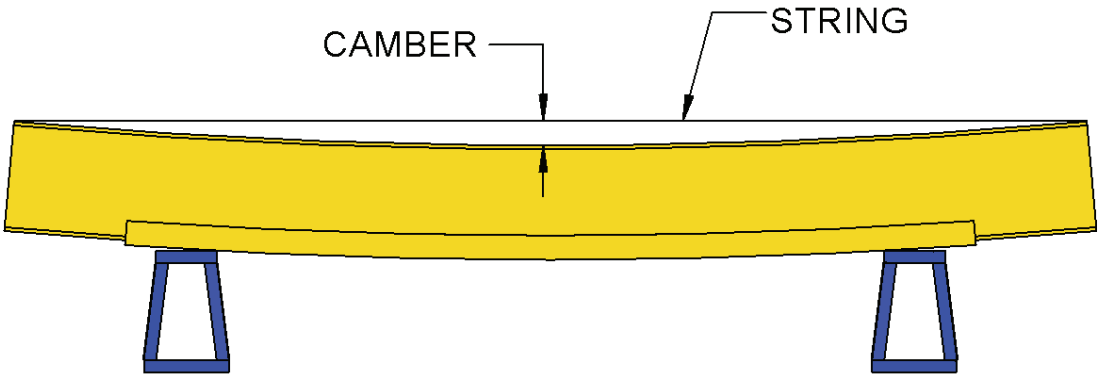

CAMBER ≤ {DEFLECTION OF GIRDER AT DEAD LOAD
+ 1/2 * DEFLECTION OF GIRDER AT LIVE LOAD}

CHAPTER 3

ASSEMBLING BRIDGE GIRDER TO END TRUCKS (SINGLE GIRDER)

3.A) TRSG END TRUCK TYPES

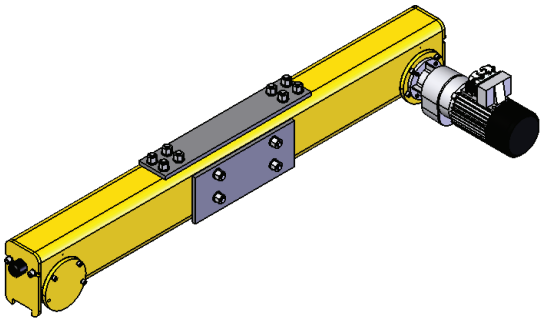

INTEGRAL-AXLE TUBE-FRAME END TRUCK

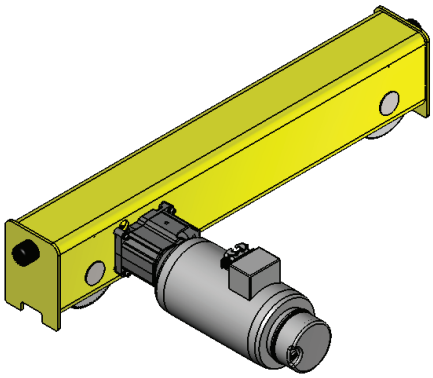

FIXED AXLE END TRUCK

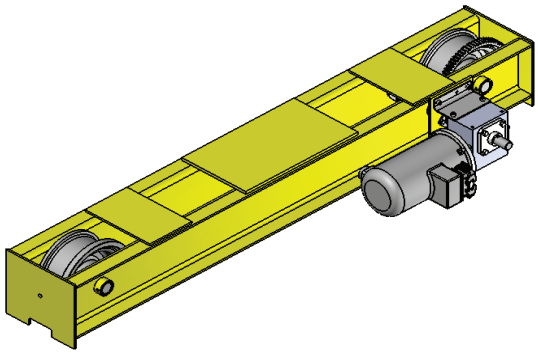

CHANNEL TYPE END TRUCK

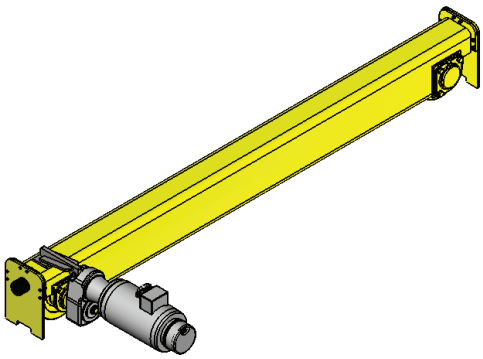

ROTATING AXLE TOP RUNNING END TRUCK

3.B) INTEGRAL-AXLE TUBE-FRAME END TRUCK

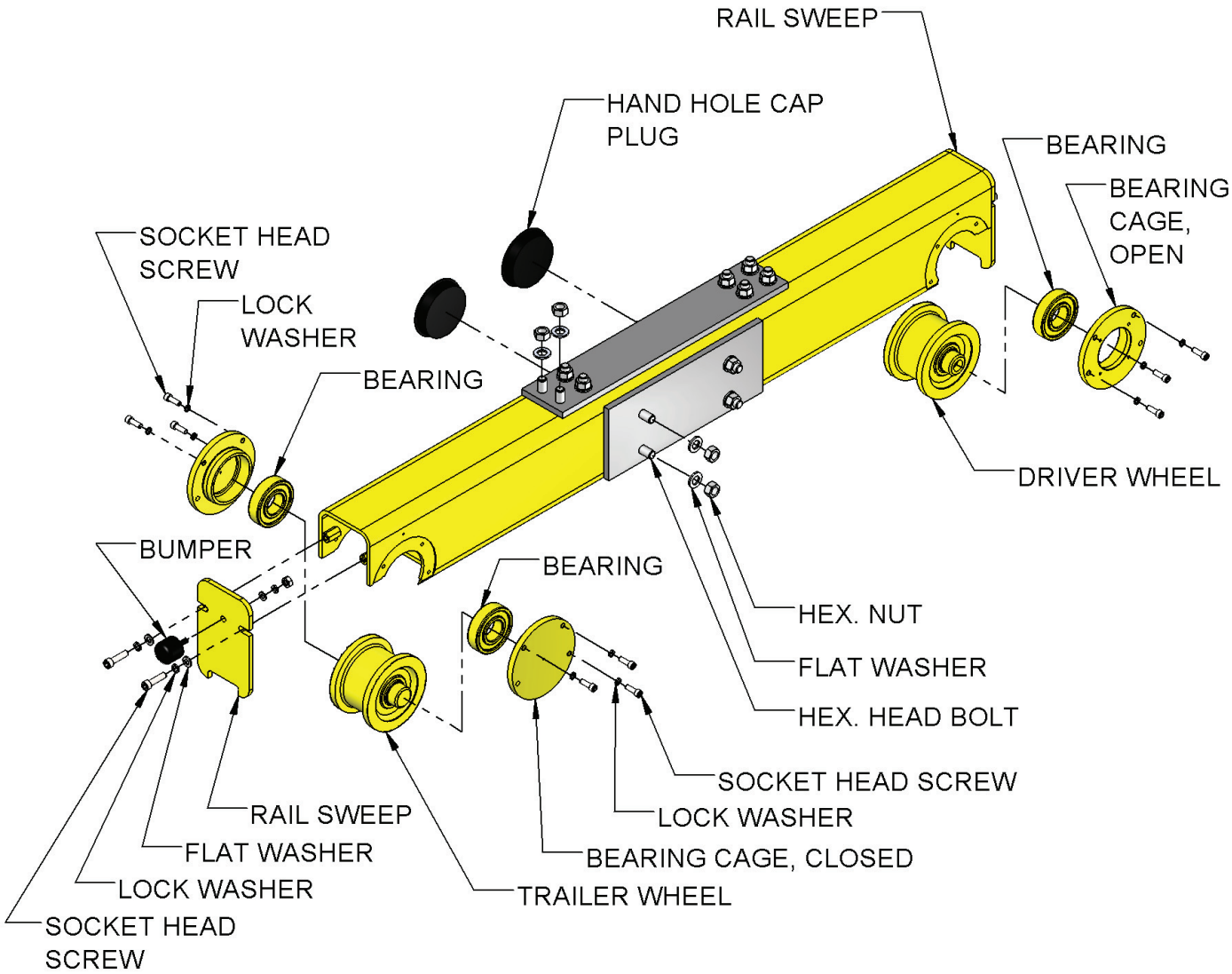

⚠ WARNING

Alterations or modifications of equipment and use of non-factory repair parts can lead to dangerous operation and injury.

TO AVOID INJURY:
DO NOT alter or modify equipment.
DO NOT use equipment to lift, support or otherwise transport people.

DO NOT suspend unattended loads over people.

3.C) FIXED AXLE END TRUCK

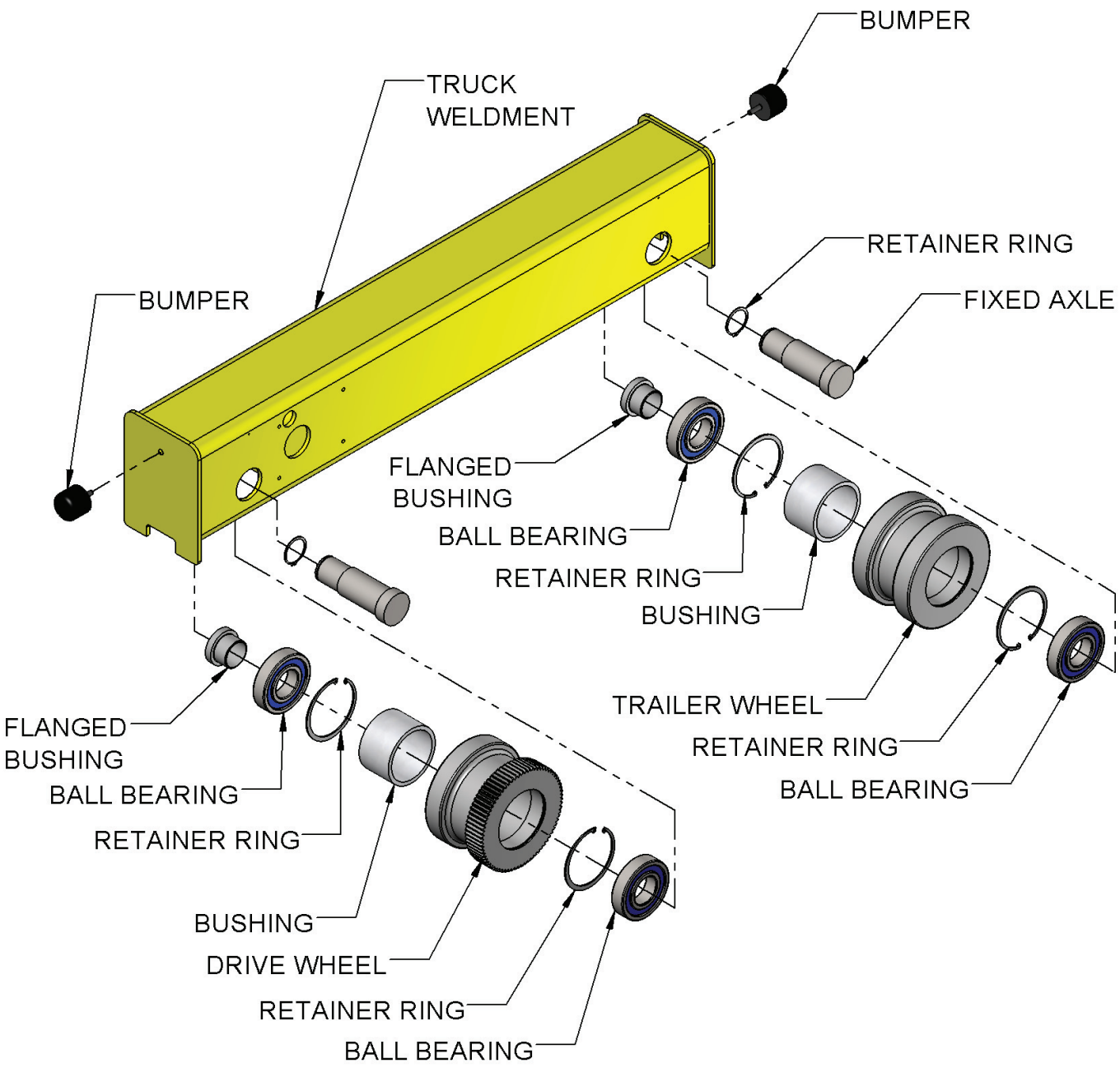

3.D) CHANNEL TYPE END TRUCK

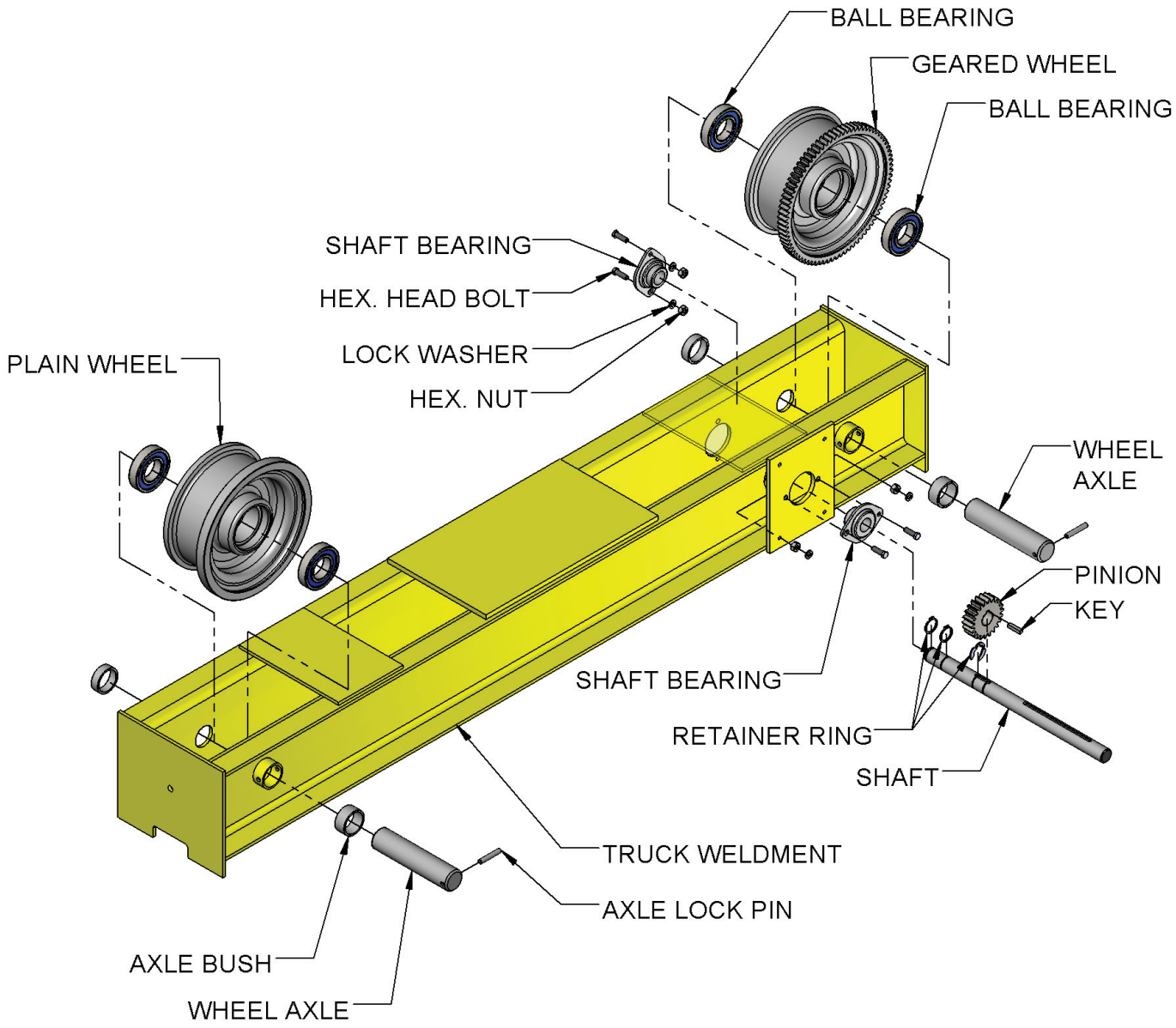

3.E) ROTATING AXLE TOP RUNNING END TRUCK

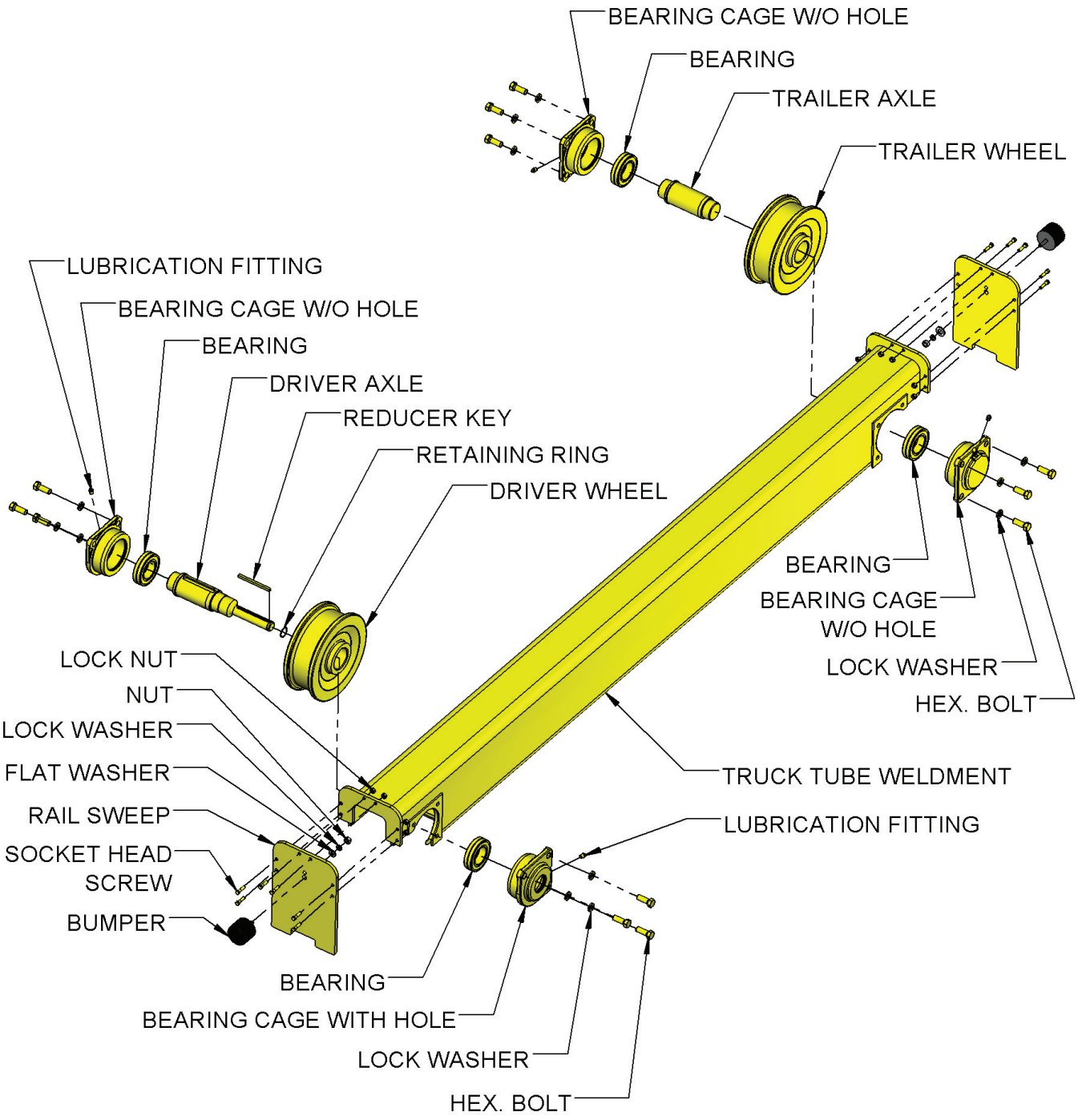

STEP 1: NOTCHING GIRDER AT ENDS (AS REQUIRED)

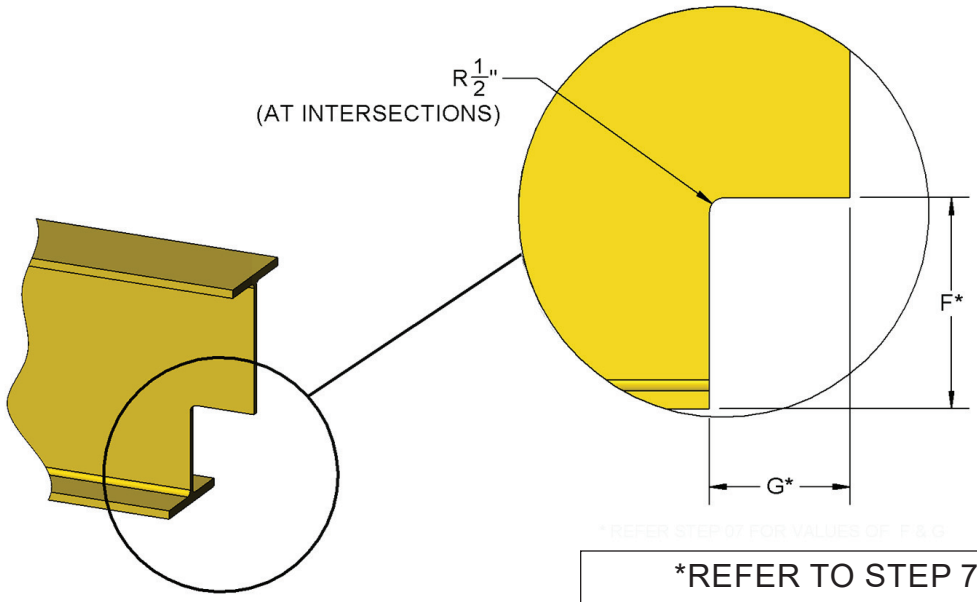

*REFER TO STEP 7 FOR VALUES OF F & G

NOTCH CUT AT BOTH ENDS OF THE GIRDER, USING TORCH OR PLASMA BURNER AND SMOOTHE THE BURNED AREA BY GRINDING.

A COPED GIRDER CONNECTION IS SHOWN FOR ILLUSTRATION PURPOSES ONLY. ACTUAL GIRDER CONNECTION ARRANGEMENT MAY DIFFER BY APPLICATION.

STEP 2: MOUNTING GIRDER ON SUPPORT (AS REQUIRED)

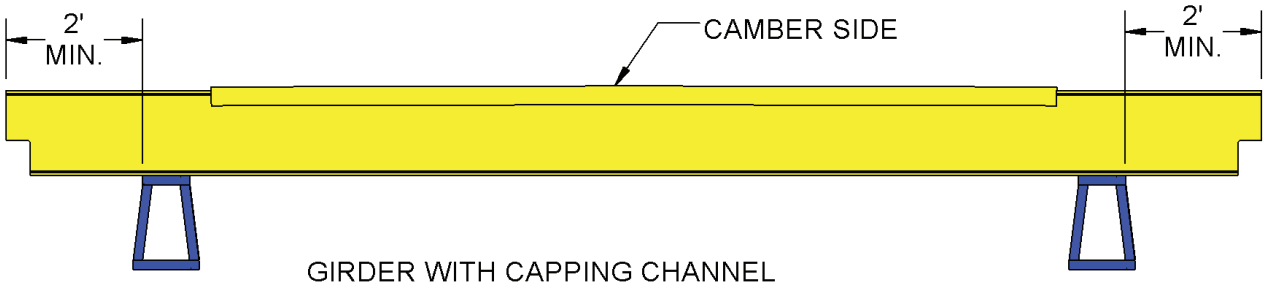

GIRDER WITH CAPPING CHANNEL

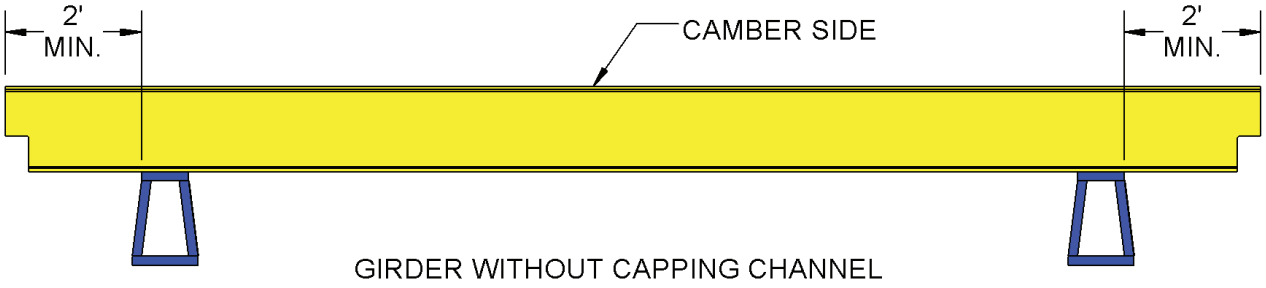

GIRDER WITHOUT CAPPING CHANNEL

Check your configuration to see if a capping channel is required.

A COPED GIRDER CONNECTION IS SHOWN FOR ILLUSTRATION PURPOSES ONLY. ACTUAL GIRDER CONNECTION ARRANGEMENT MAY DIFFER BY APPLICATION.

STEP 3: LOCATE & ALIGN END TRUCKS

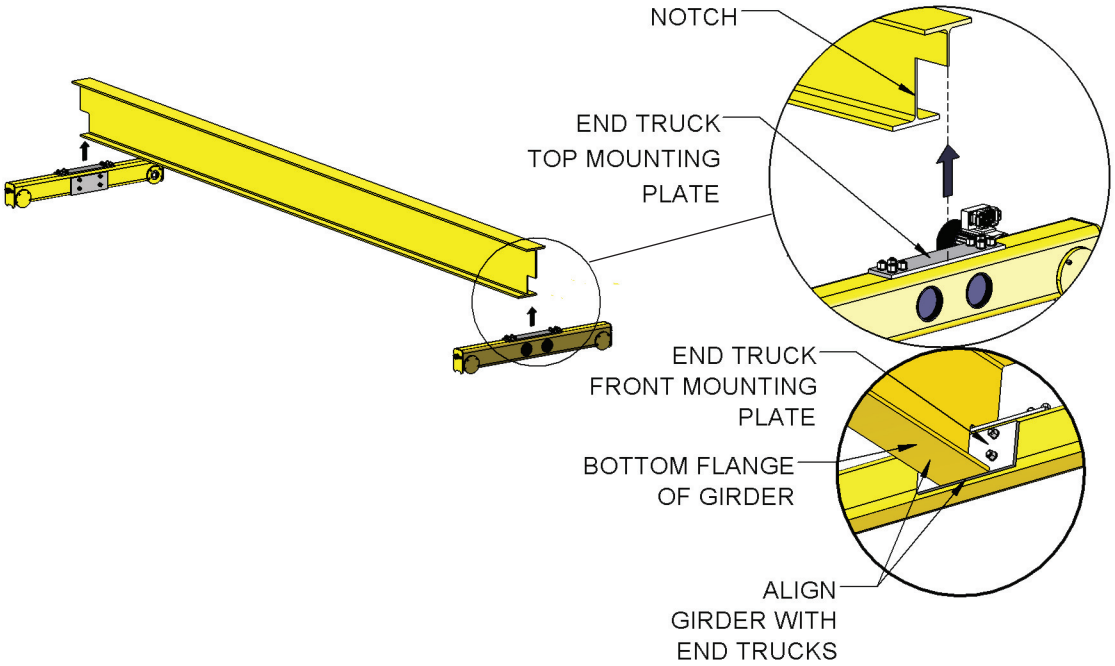

A COPED GIRDER CONNECTION IS SHOWN FOR ILLUSTRATION PURPOSES ONLY.
ACTUAL GIRDER CONNECTION ARRANGEMENT MAY DIFFER BY APPLICATION.

STEP 4: POSITION END TRUCKS

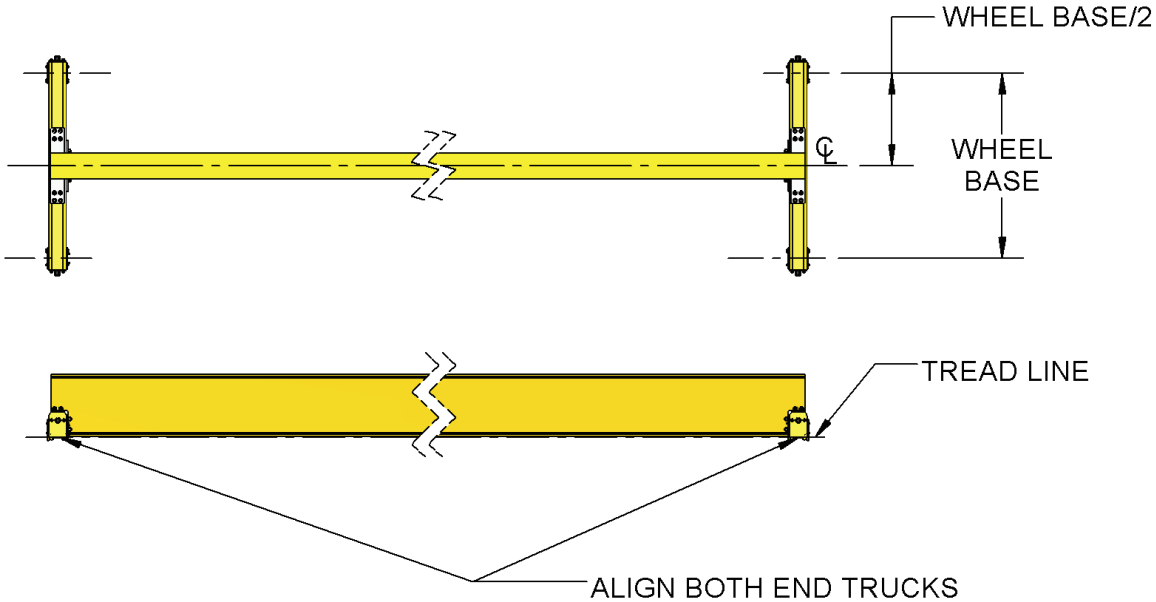

A COPED GIRDER CONNECTION IS SHOWN FOR ILLUSTRATION PURPOSES ONLY.
ACTUAL GIRDER CONNECTION ARRANGEMENT MAY DIFFER BY APPLICATION.

STEP 5: CHECK SQUARENESS BETWEEN END TRUCKS

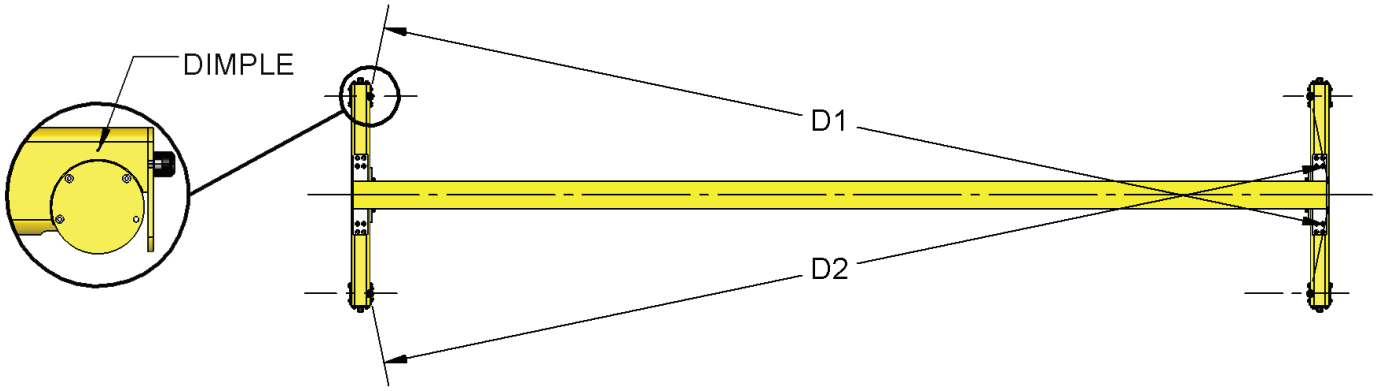

FOR SQUARENESS BETWEEN END TRUCKS: (D1~D2) ≤ 1/16"

D1 & D2 - DIAGONAL MEASUREMENTS

NOTICE

The crane builder and user are responsible for marking the crane and also for checking for compliance with all local, state and national codes.

STEP 6: CHECK SPAN DISTANCE BETWEEN END TRUCKS

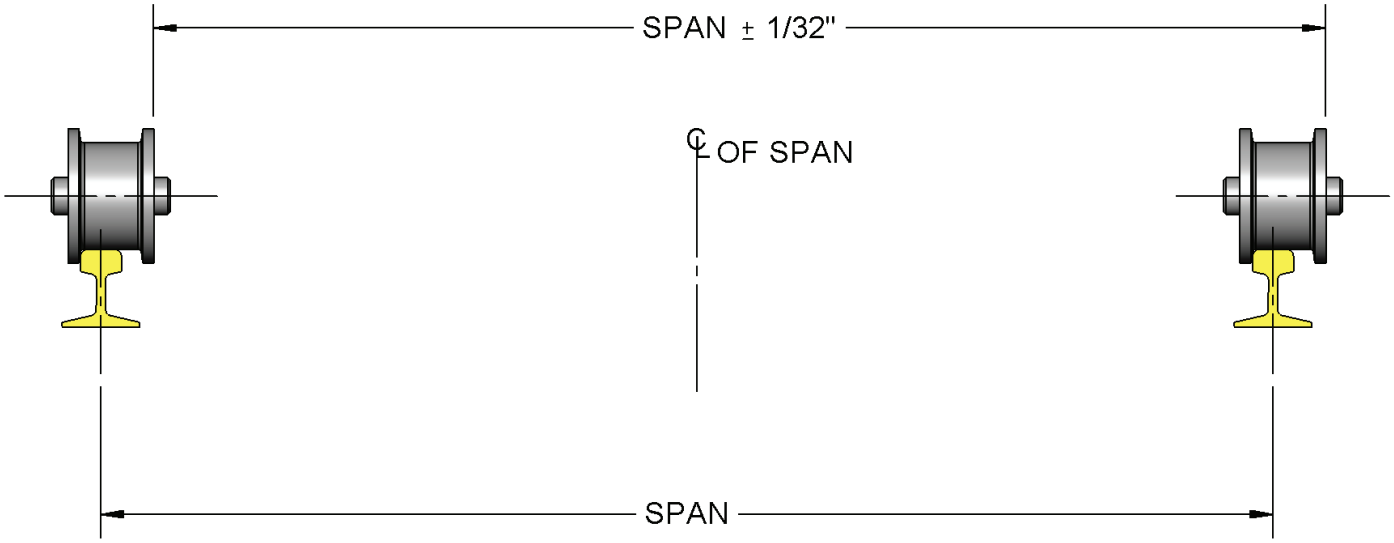

STEP 7: WELDING END TRUCKS WITH GIRDER

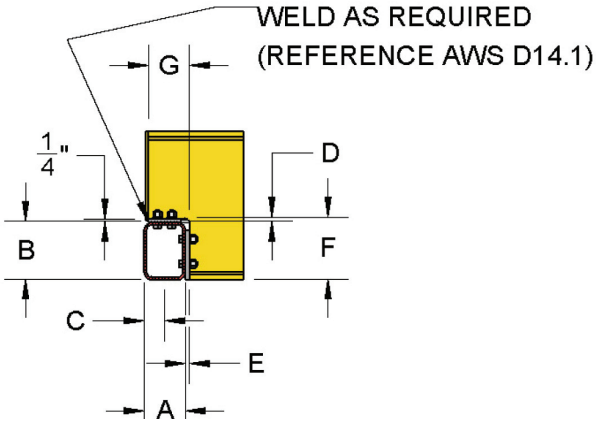

SECTION A-A

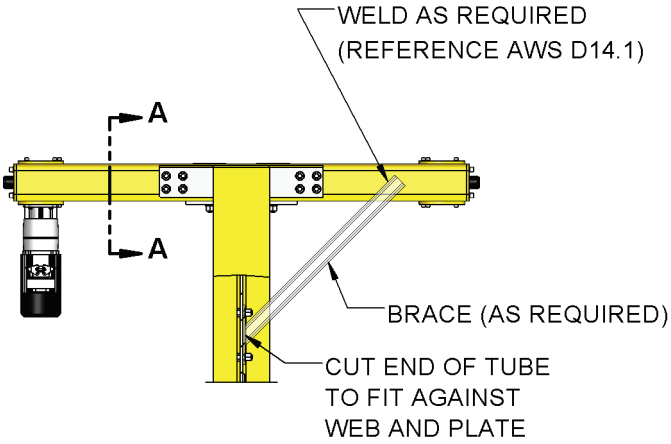

NOTICE

Assembly of beam and truck requires welding. IT IS EXTREMELY IMPORTANT TO THE SAFETY OF THIS BRIDGE THAT THIS WELDING BE DONE BY A COMPETENT WELL-TRAINED WELDER. It is our strong recommendation that the welder used in this construction be qualified as prescribed by the American Welding Society (AWS) Structural Welding Code-Steel D1.1-2008 and Specification for Welding Industrial and Mill Cranes D14.1-2005.

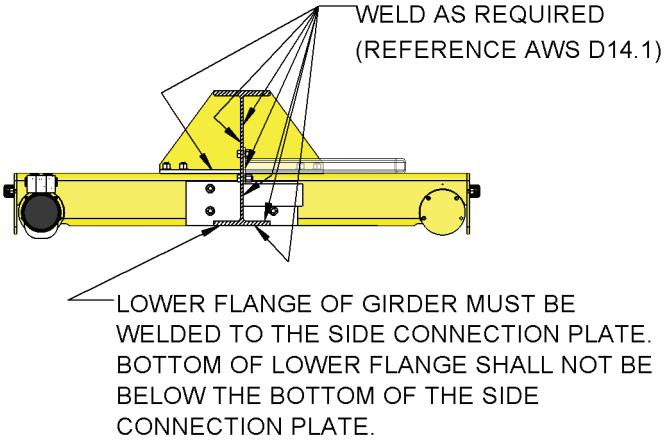

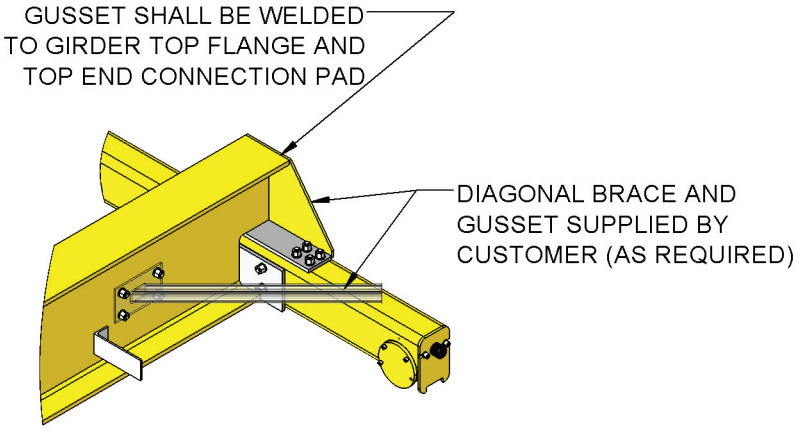

WHEEL DIAMETER	A	B	C	D	E	F	G
Ø115mm	5"	7"	2 1/2"	1/2"	1/2"	7"	5"
Ø160mm	6"	8"	3"	1/2"	1/2"	7 1/2"	5 1/2"
Ø200mm	8"	10"	4"	1/2"	1/2"	9 1/2"	7 1/2"
Ø260mm	8"	12"	4"	3/4"	3/4"	11 3/4"	7 3/4"
Ø305mm	8"	12"	4"	3/4"	3/4"	11 3/4"	7 3/4"

A COPED GIRDER CONNECTION IS SHOWN FOR ILLUSTRATION PURPOSES ONLY.
ACTUAL GIRDER CONNECTION ARRANGEMENT MAY DIFFER BY APPLICATION.

STEP 8: TRIA METRIC END TRUCK DRIVE INSTALLATION

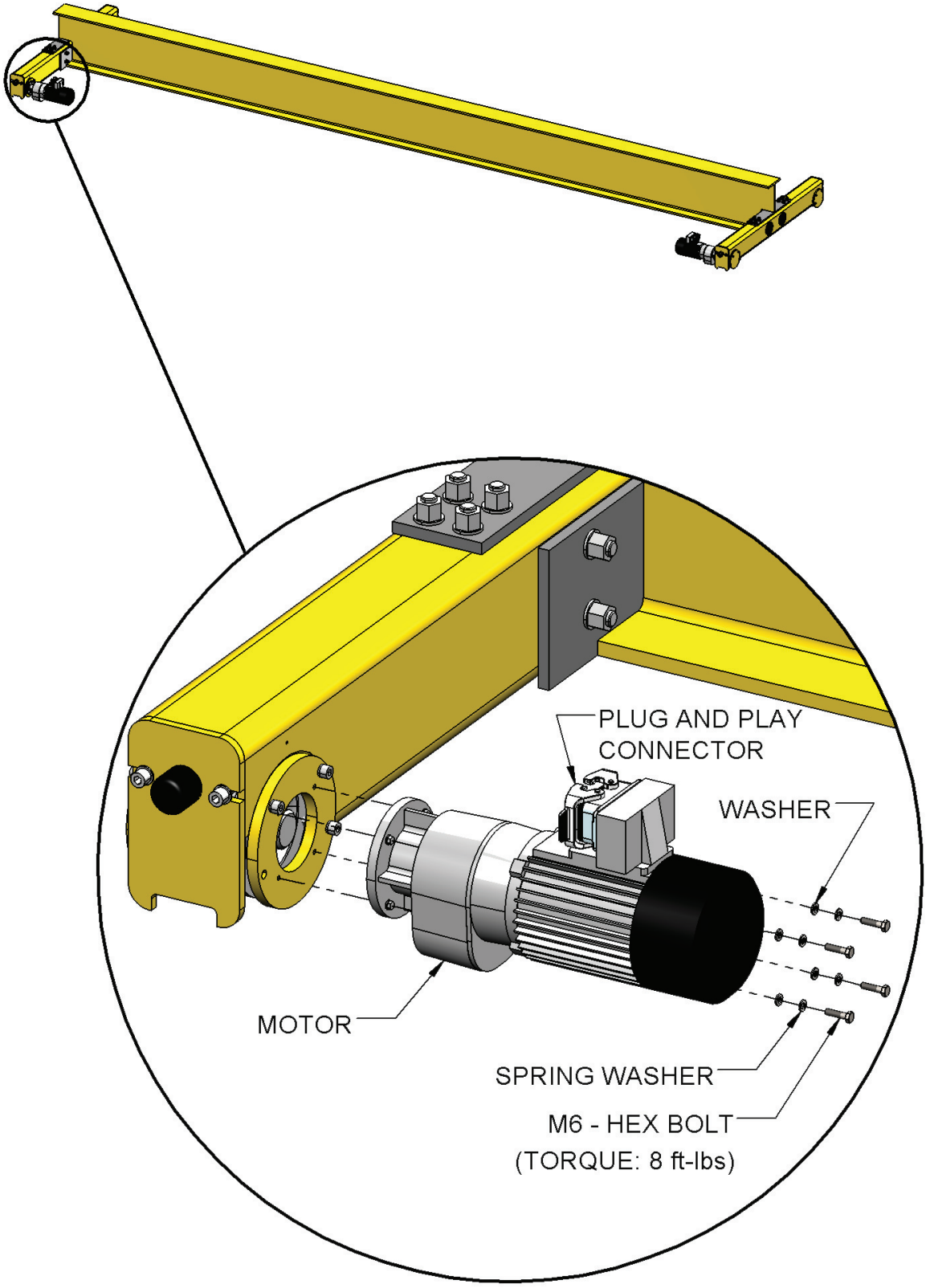

A COPED GIRDER CONNECTION IS SHOWN FOR ILLUSTRATION PURPOSES ONLY.
ACTUAL GIRDER CONNECTION ARRANGEMENT MAY DIFFER BY APPLICATION.

STEP 8A: TRFA END TRUCK A4 DRIVE INSTALLATION

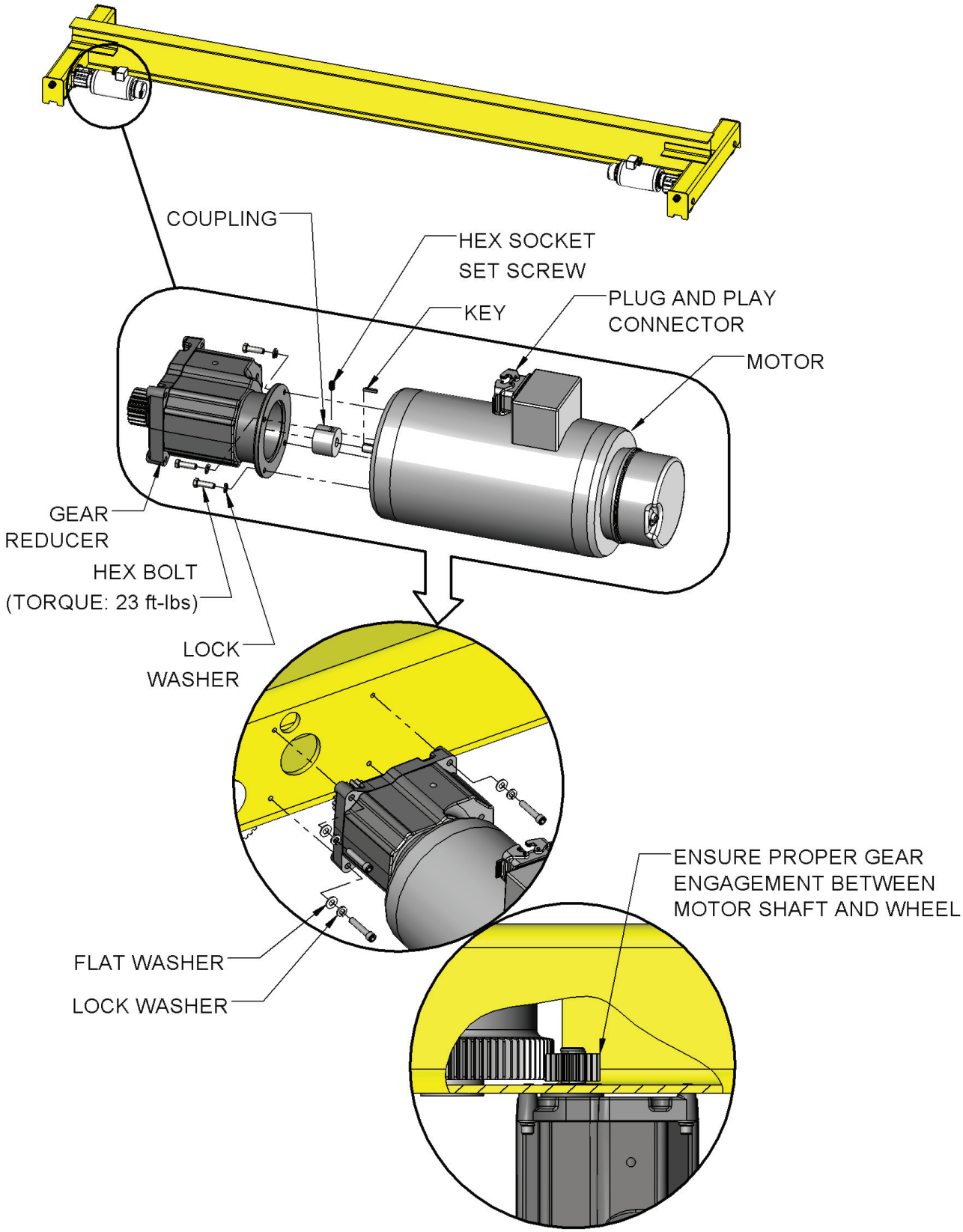

STEP 8B: TRFC END TRUCK DRIVE INSTALLATION

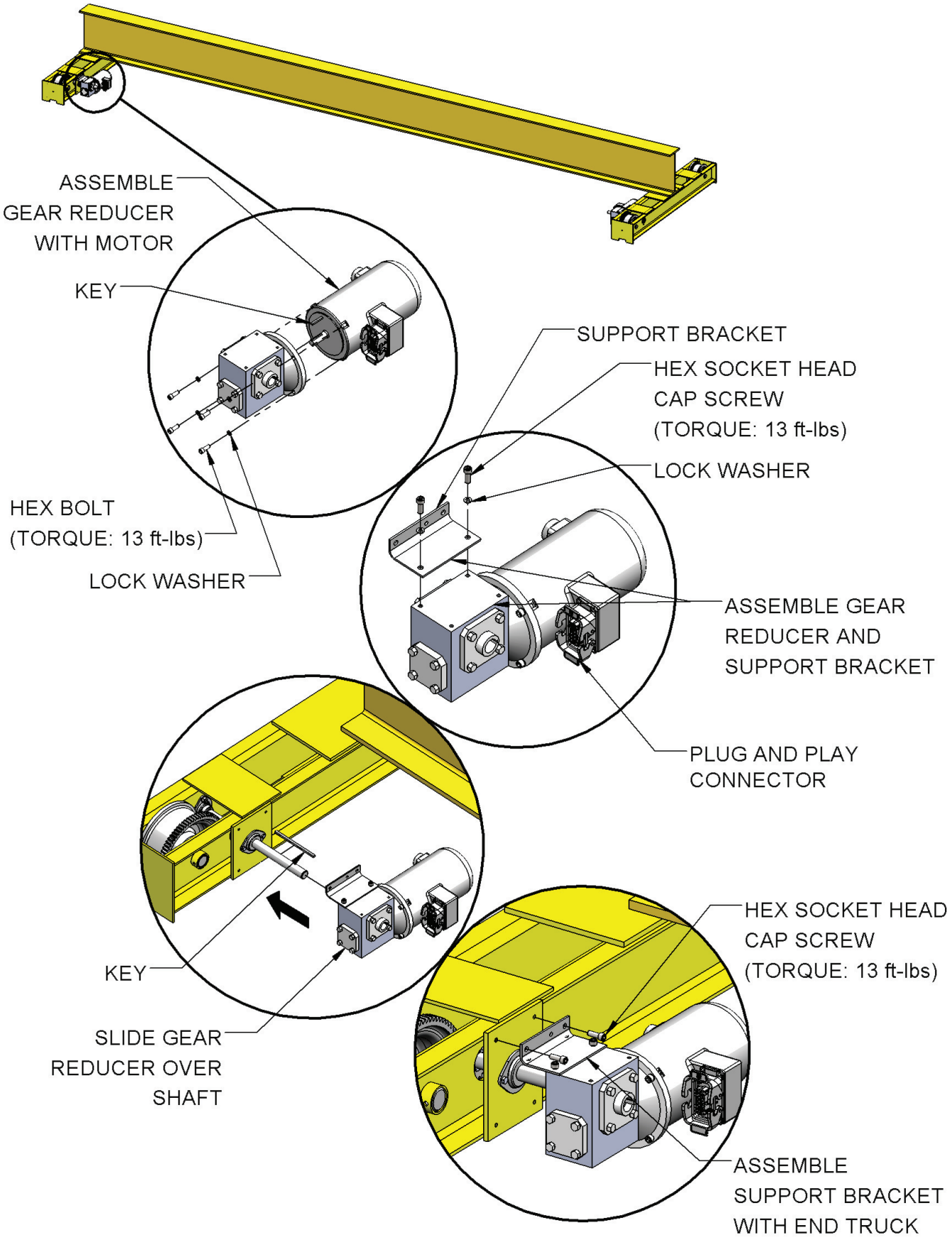

STEP 8C: TRRA END TRUCK DRIVE INSTALLATION

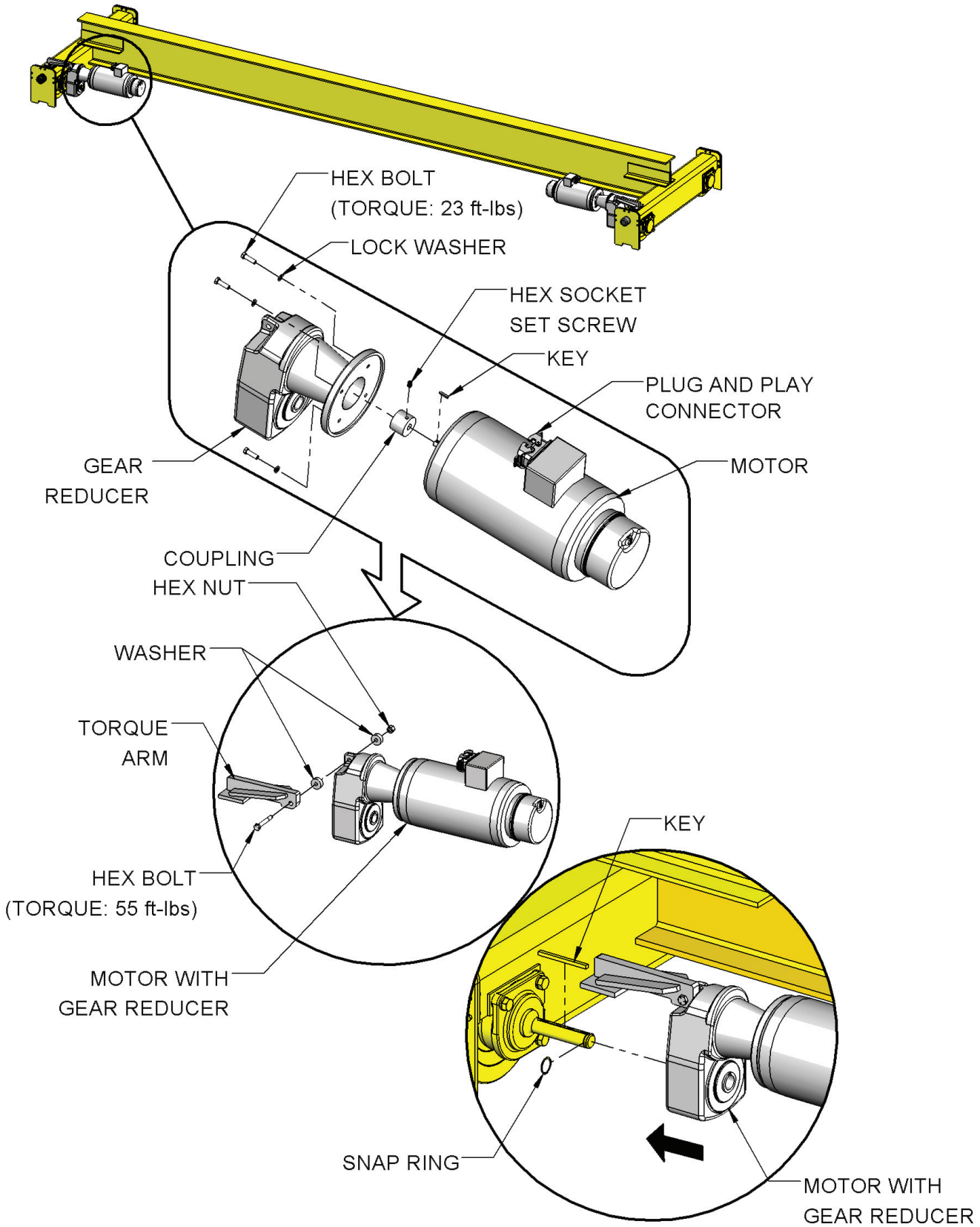

STEP 9: BRIDGE BOLTED PLATE END CONNECTION SINGLE GIRDER

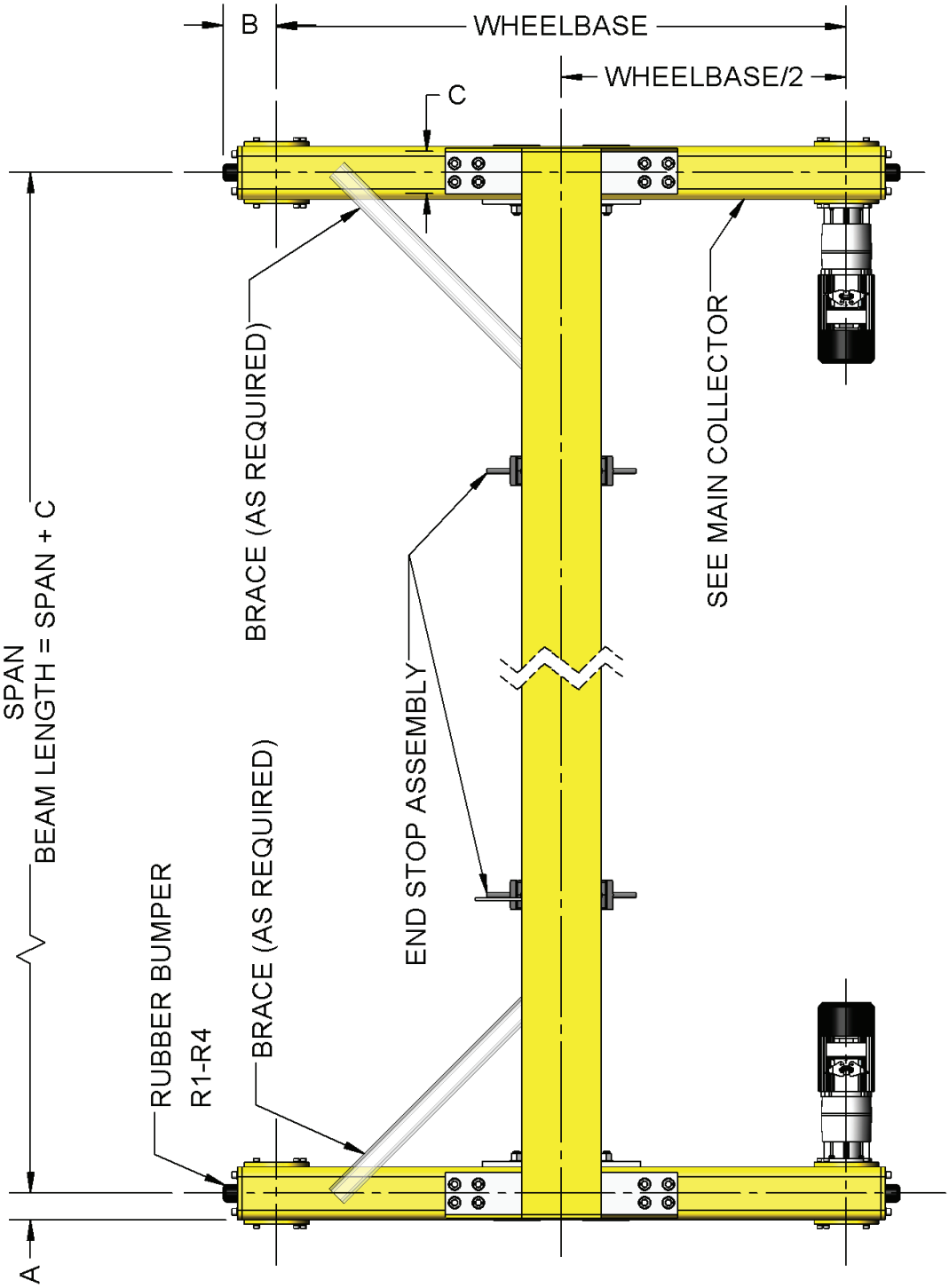

WHEEL DIAMETER	A	B						C
		R1	R2	R3	R4	R5	R6	
Ø115mm	2 1/2"	5"	5 5/16"	5 3/4"	-	-	-	4"
Ø160mm	3"	5 3/4"	6 1/16"	6 1/2"	-	-	-	4"
Ø200mm	4"	-	7 1/16"	7 1/2"	8"	-	-	6"
Ø260mm	4"	-	-	8 7/8"	9 3/8"	10 1/8"	-	6"
Ø305mm	4"	-	-	-	9 3/8"	11 1/4"	12 3/64"	6"

A COPED GIRDER CONNECTION IS SHOWN FOR ILLUSTRATION PURPOSES ONLY.
ACTUAL GIRDER CONNECTION ARRANGEMENT MAY DIFFER BY APPLICATION.

CHAPTER 4

END STOPS & TROLLEY STOPS

4.A) END STOP ASSEMBLY

⚠ WARNING

Trolley stops (clip angles) or end stop assemblies must be installed on both ends of the bridge beam to prevent hoist trolley from running off the end of the beam, which could result in injury to the operator and others and damage to the load and other property.

NOT FOR USE ON PATENTED TRACK, FLANGE WIDTHS LESS THAN 3 3/4", OR GREATER THAN 26"

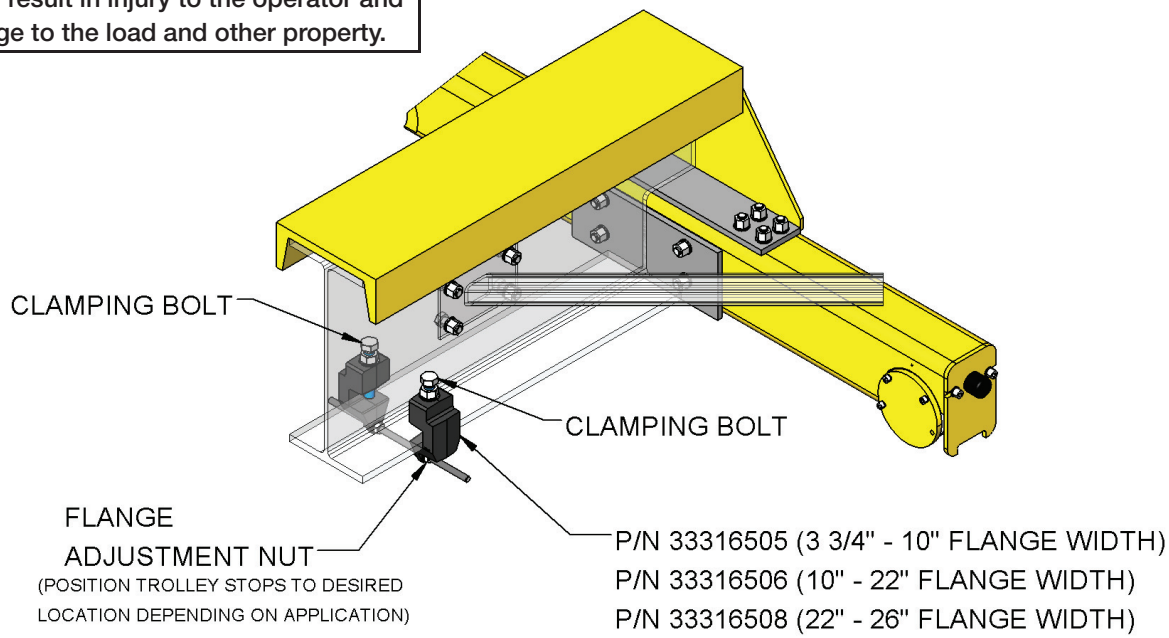

4.B TROLLEY STOPS SUPPLIED BY CUSTOMER

TROLLEY STOPS	
BRIDGE BEAM FLANGE WIDTH	ANGLE SIZE
3 5/8 TO 4	3 1/2 X 3 1/2 X 1/2
4 1/8 TO 6 1/4	5 X 3 1/2 X 1/2
6 5/8 TO 8 1/4	6 X 3 1/2 X 1/2
8 5/8 TO 10 1/2	7 X 4 X 1/2
10 5/8 TO 13	8 X 4 X 1/2

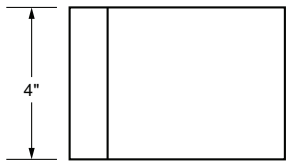

LONGEST SIDE OF ANGLE MOUNTED PERPENDICULAR TO GIRDER WEB

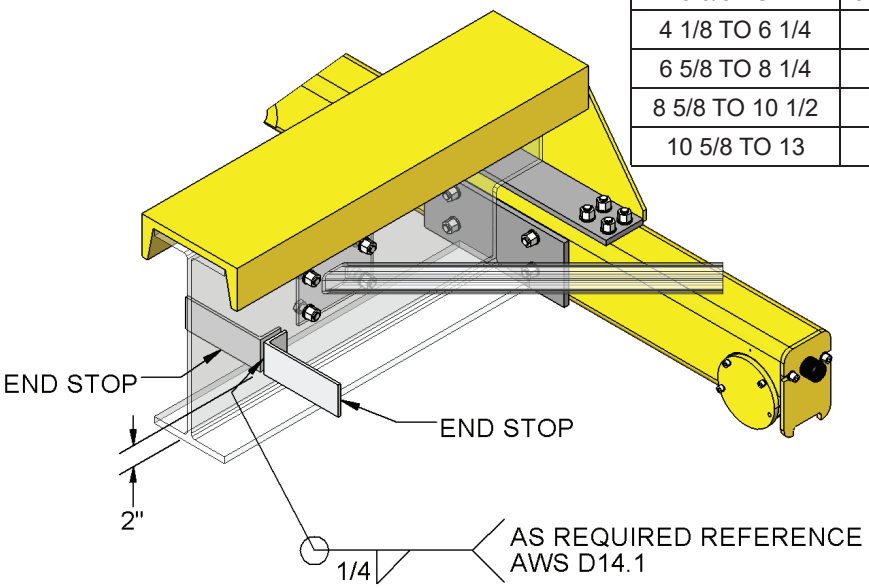

⚠ WARNING

If bridge crane is mounted on an open-end runway rail, then end stops must be installed to prevent bridge crane from running off the end of the runway rail resulting in injury to the operator and others and damages to the load and other property. End stops for the trolley must also be installed.

A COPED GIRDER CONNECTION IS SHOWN FOR ILLUSTRATION PURPOSES ONLY. ACTUAL GIRDER CONNECTION ARRANGEMENT MAY DIFFER BY APPLICATION.

CHAPTER 5

MOUNTING HOIST ON GIRDER

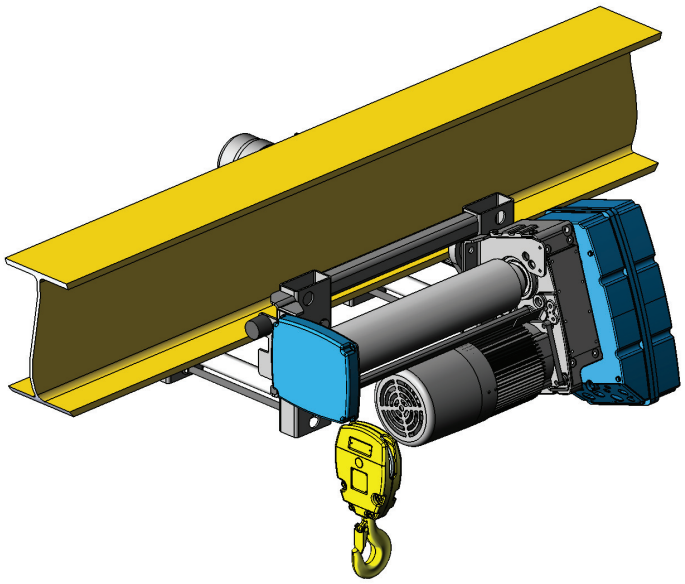

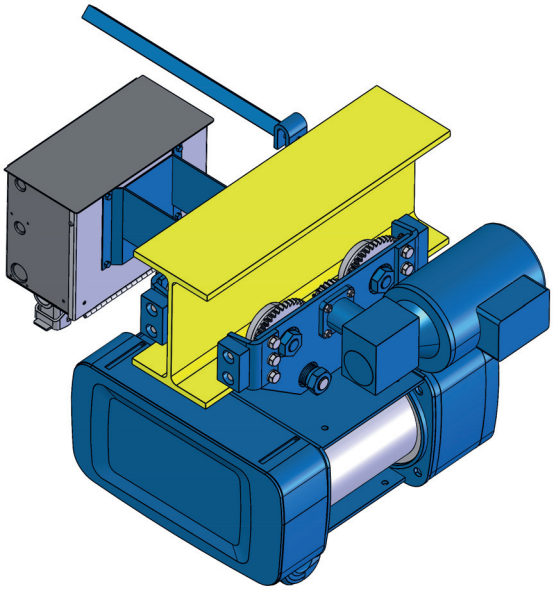

YK/SK HOIST INSTALLATION

STEP 1: PREPARATION FOR MOUNTING HOIST ON GIRDER

⚠ CAUTION

Prior to installing the hoist, check for any damage to the hoist during shipment. DO NOT install a damaged hoist.

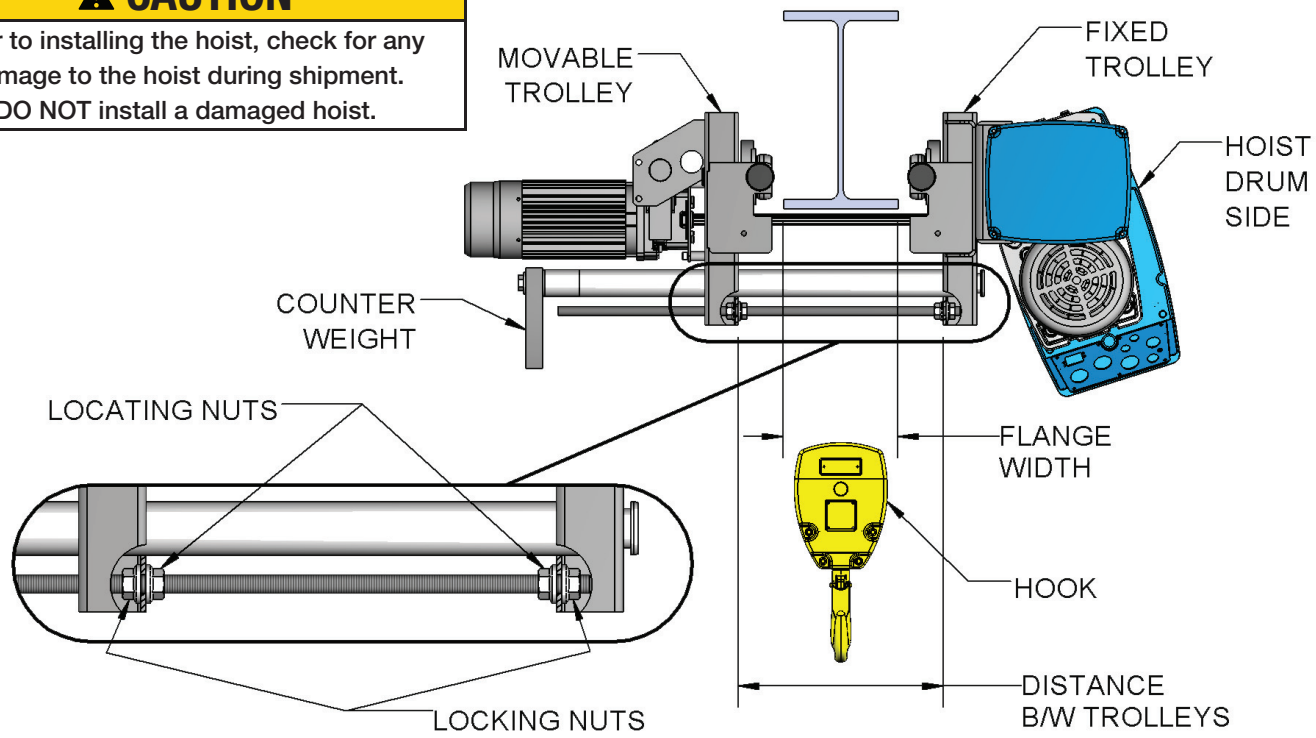

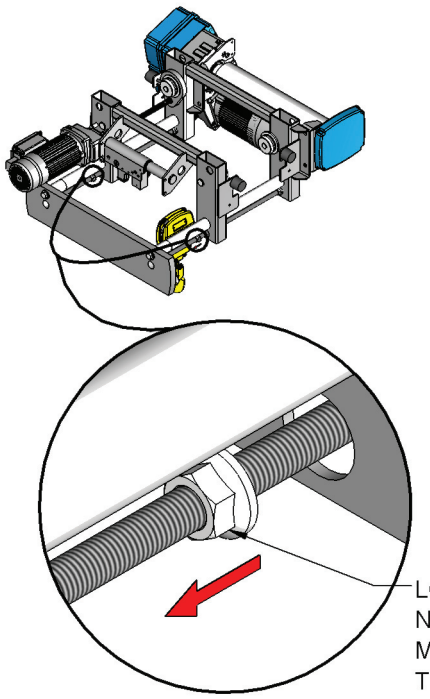

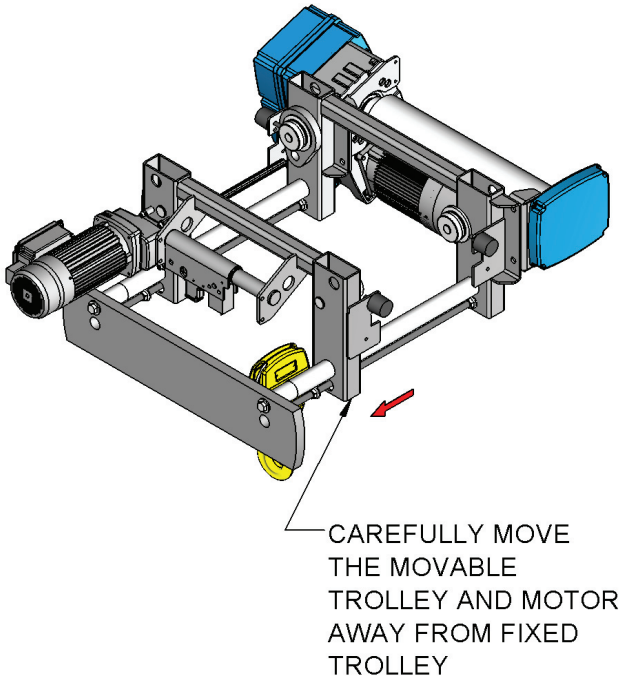

STEP 2: MOUNTING HOIST ON GIRDER

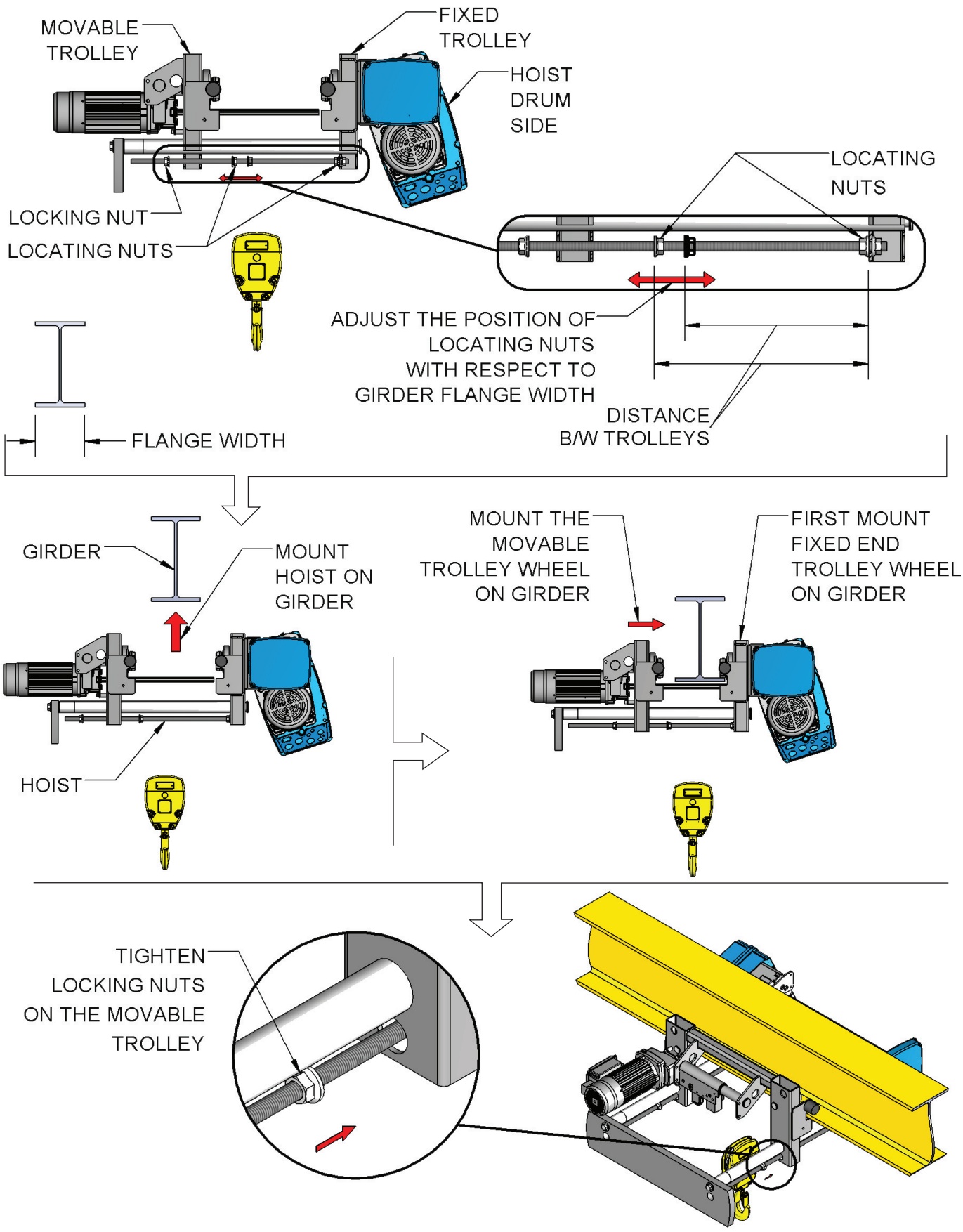

Y80/800 HOIST INSTALLATION

STEP 1: PREPARATION FOR MOUNTING HOIST ON GIRDER

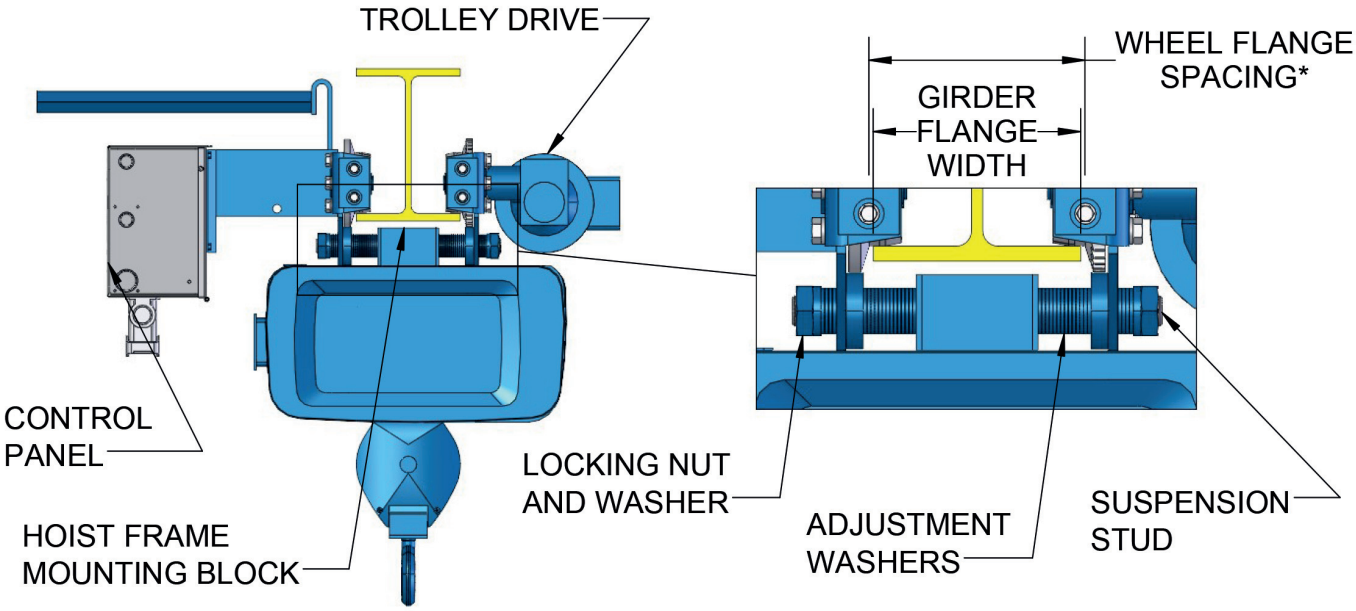

*WHEEL FLANGE SPACING SHOULD BE 1/4"-3/8" GREATER THAN GIRDER FLANGE WIDTH.

MEASURE THE GIRDER FLANGE WIDTH AND DETERMINE NEEDED WASHER ARRANGEMENT PRIOR TO ATTEMPTING TO INSTALL THE HOIST.

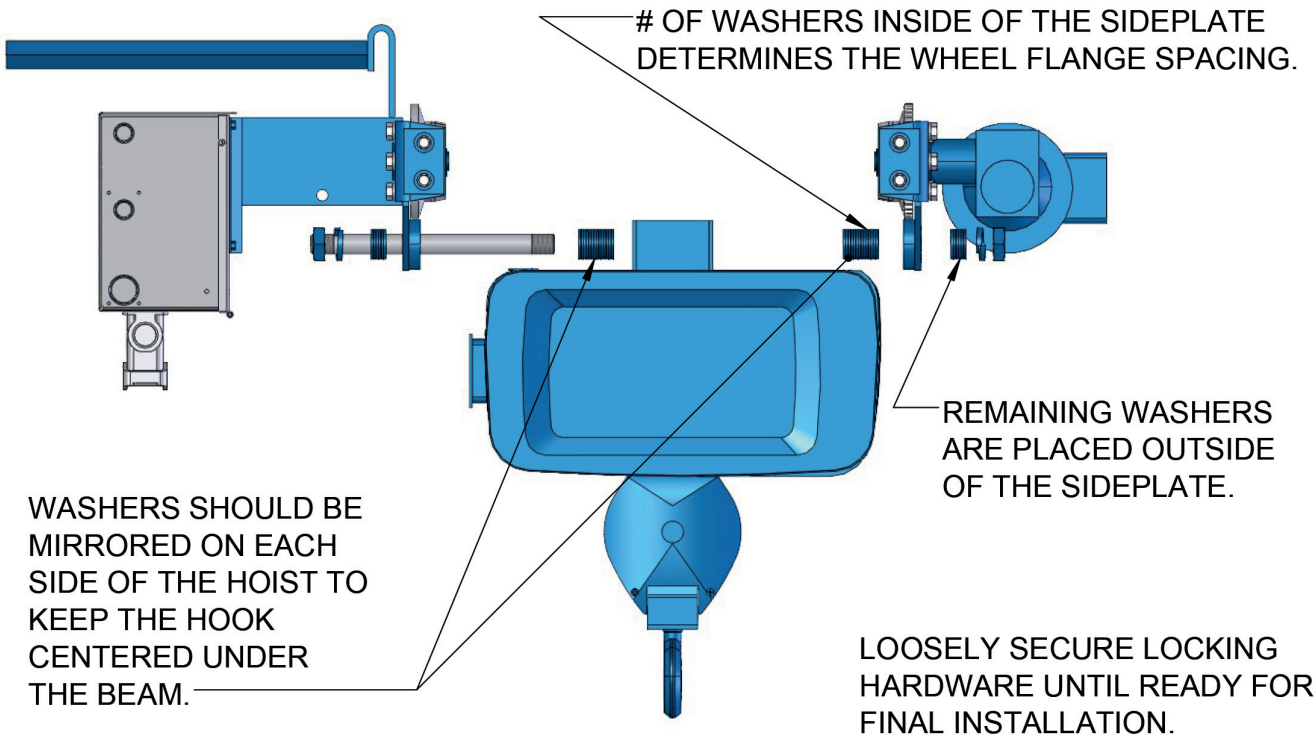

STEP 2: MOUNTING HOIST ON GIRDER

REMOVE THE SIDEPLATE(S) FROM 1 SIDE OF THE HOIST AND MOUNT THE REMAINING WHEELS ON THE GIRDER.

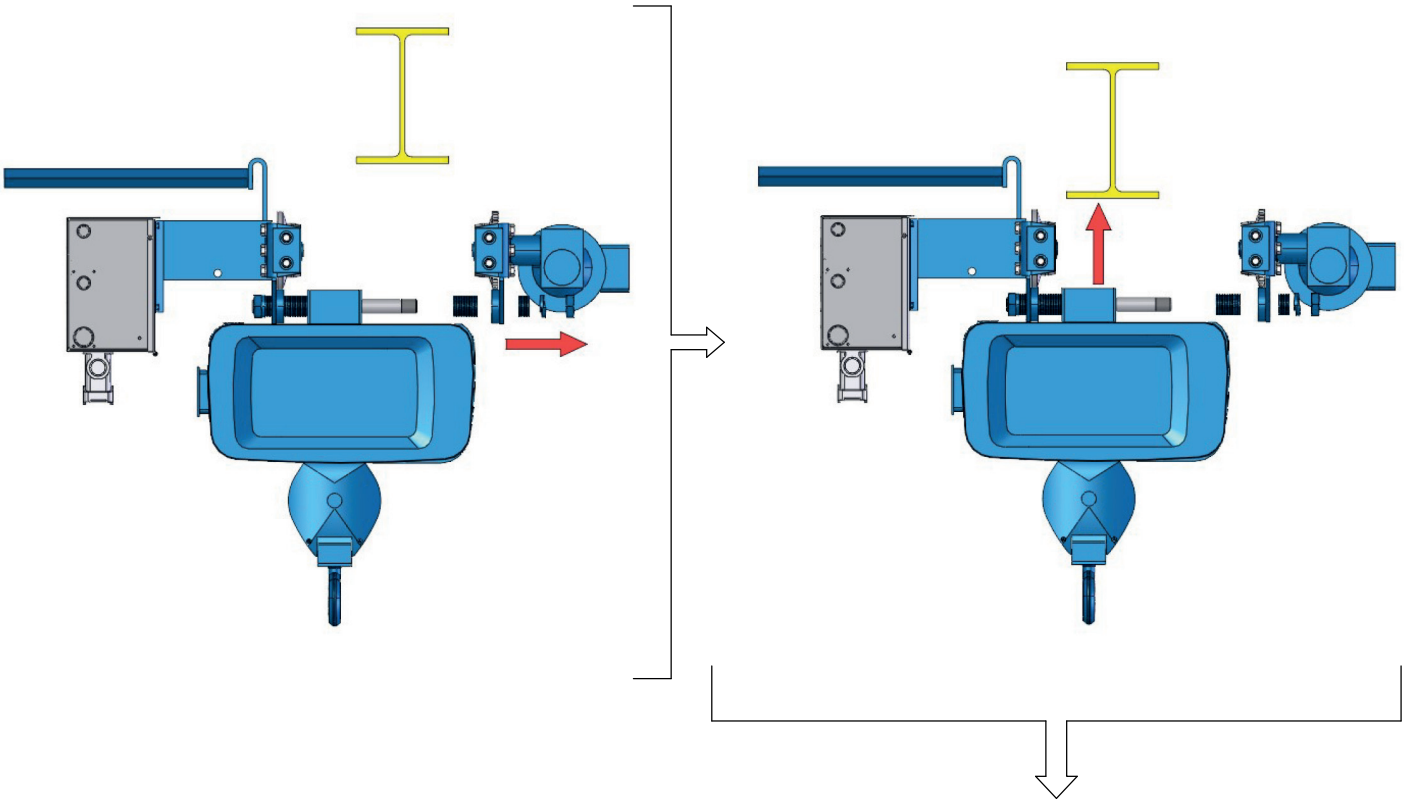

REPLACE THE SIDEPLATE(S) TO FULLY MOUNT THE HOIST TO THE GIRDER.

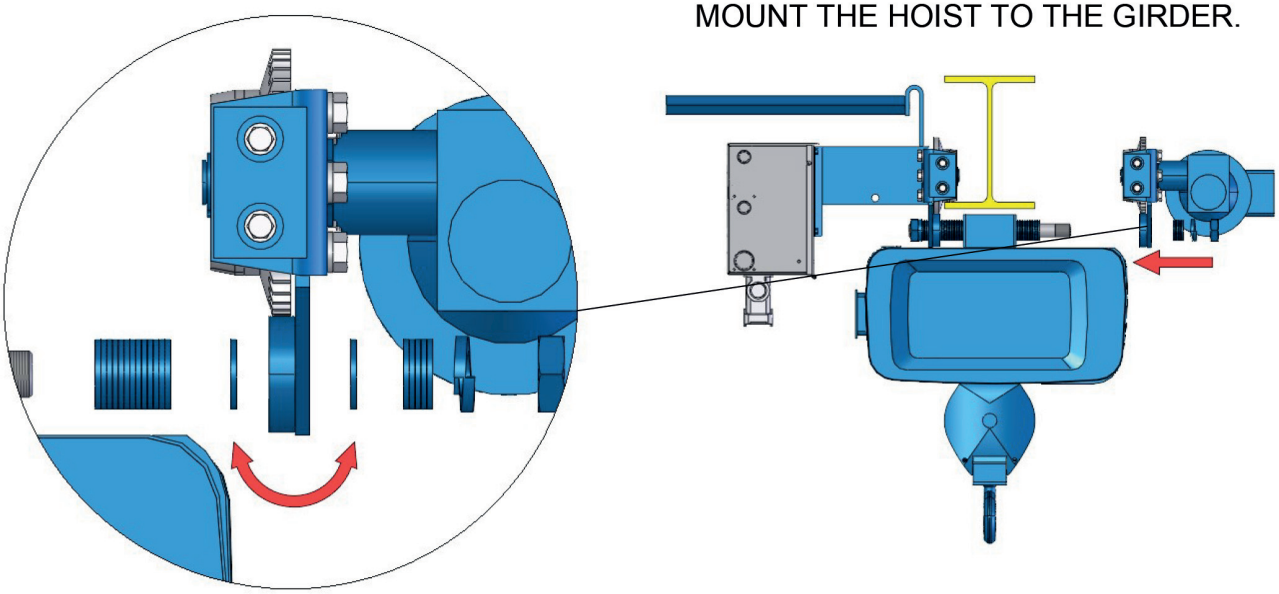

MINOR ADJUSTMENTS TO WHEEL SPACING CAN BE MADE BY MOVING SINGLE WASHERS TO THE OPPOSITE SIDES OF THE SIDEPLATES.

TIGHTEN THE MOUNTING NUTS TO COMPLETE INSTALLATION.

CHAPTER 6
FESTOON SYSTEM INSTALLATION

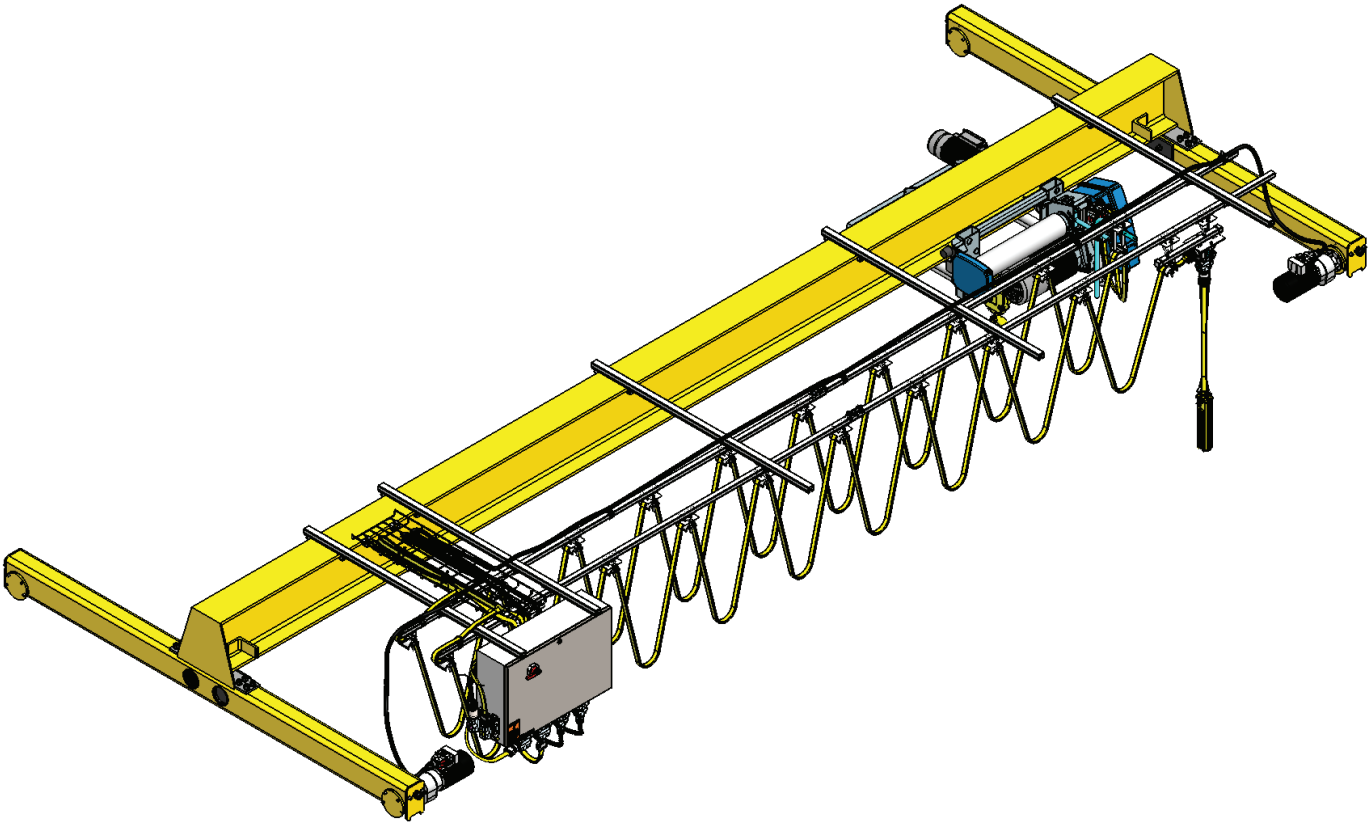

6.A) PLAN VIEW

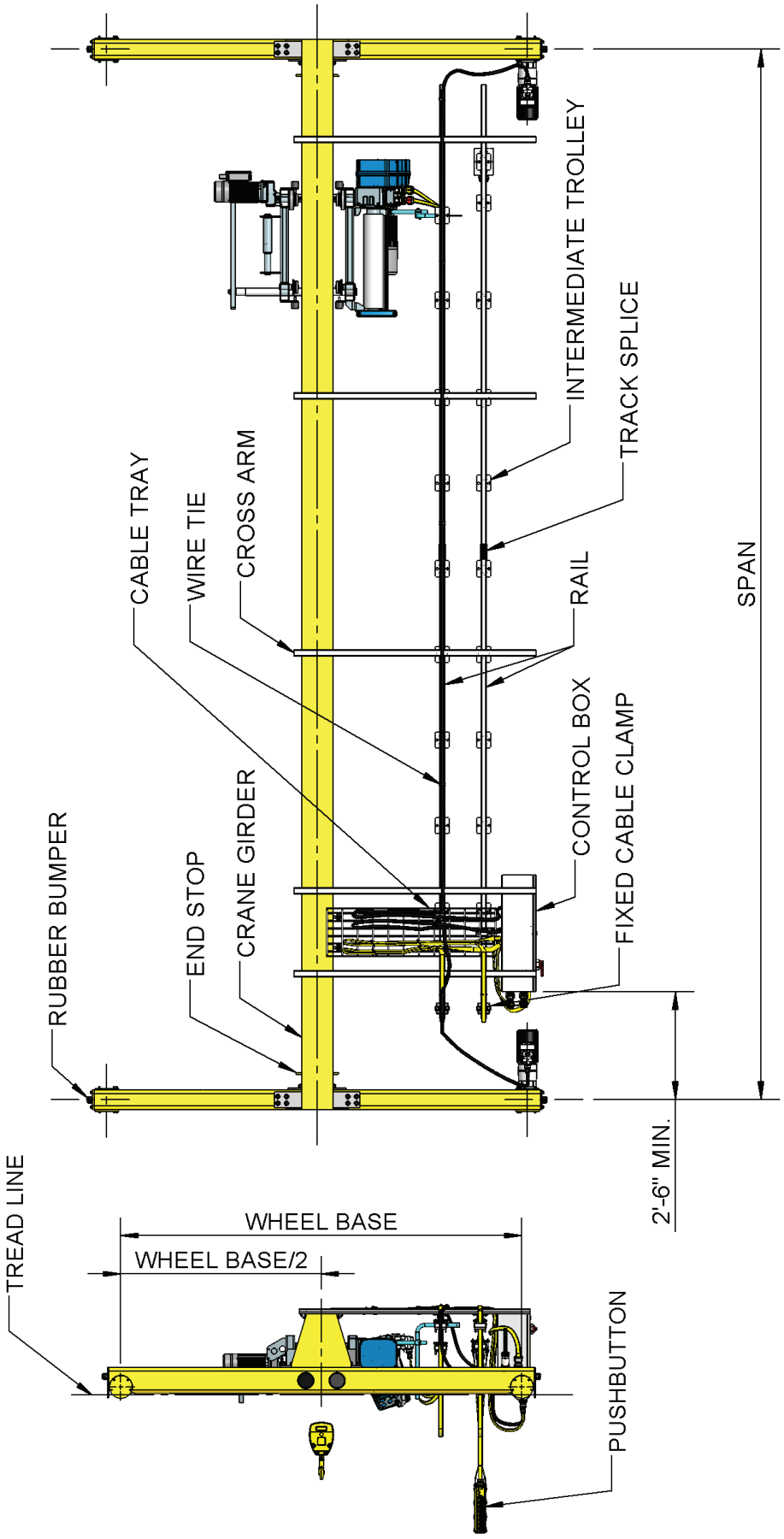
INTERMEDIATE TROLLEY
TRACK SPLICE
SPAN
CABLE TRAY
WIRE TIE
CROSS ARM
RAIL
CONTROL BOX
FIXED CABLE CLAMP
RUBBER BUMPER
END STOP
CRANE GIRDER
2'-6" MIN.
TREAD LINE
WHEEL BASE
WHEEL BASE/2
PUSHBUTTON

STEP 1: CLAMPING CROSS ARM & CONTROL BOX SUPPORT RAILS

⚠ WARNING

Check for any damage to the crane kit components during shipment. DO NOT install damaged crane kit components.

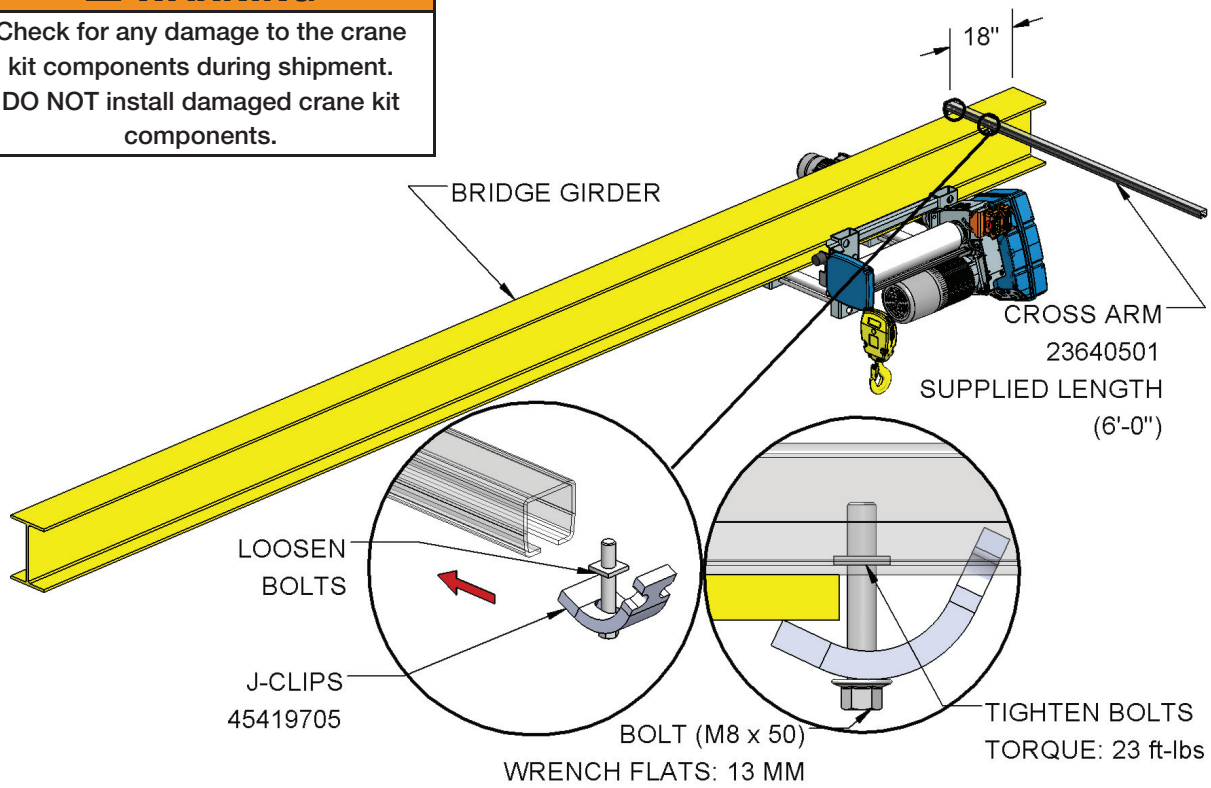

STEP 2: SPACING FOR CROSS ARMS/SUPPORT RAILS

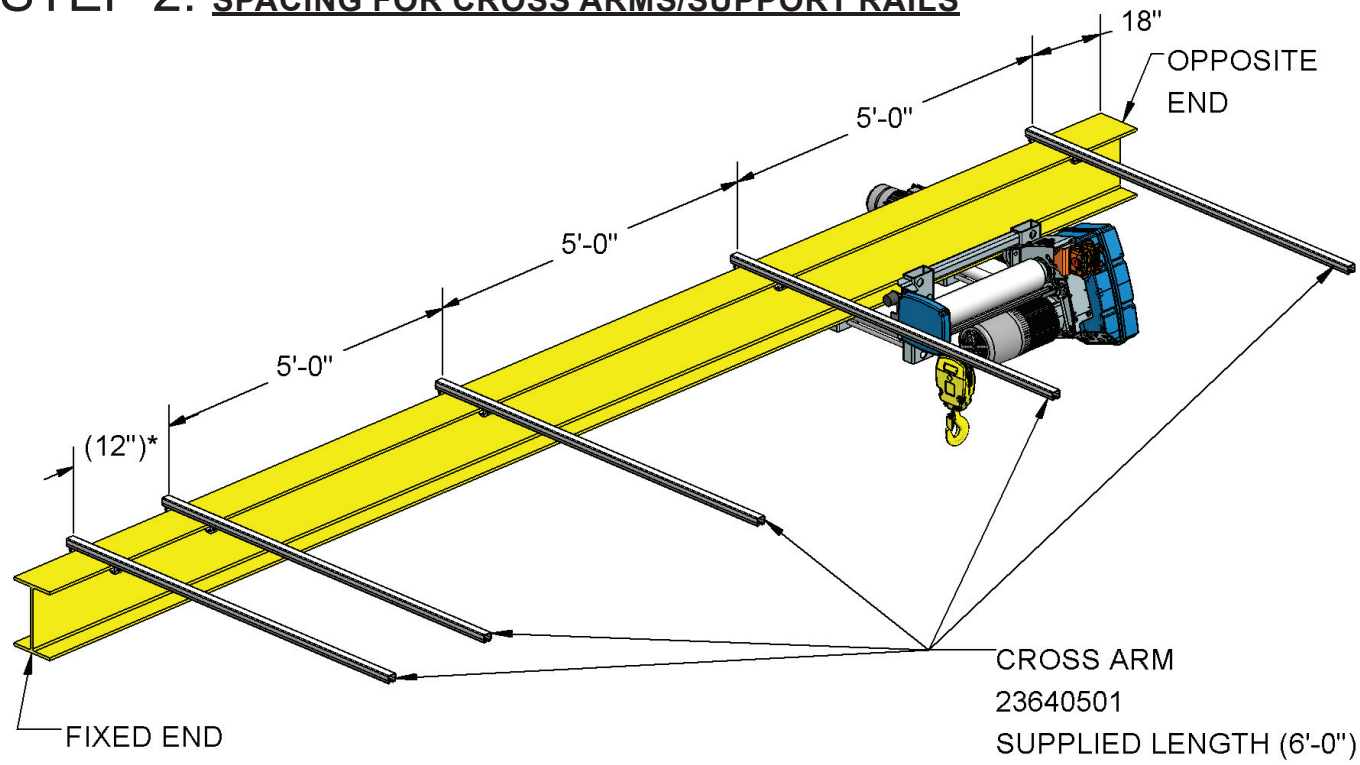

NOTE: MARK THE LOCATIONS OF THE CROSS ARM ON BRIDGE GIRDER BEFORE MOUNTING AS PER THE ABOVE DIMENSIONS.

* DIMENSION TO SUIT CONTROL BOX.

STEP 3: C-RAIL MOUNTING

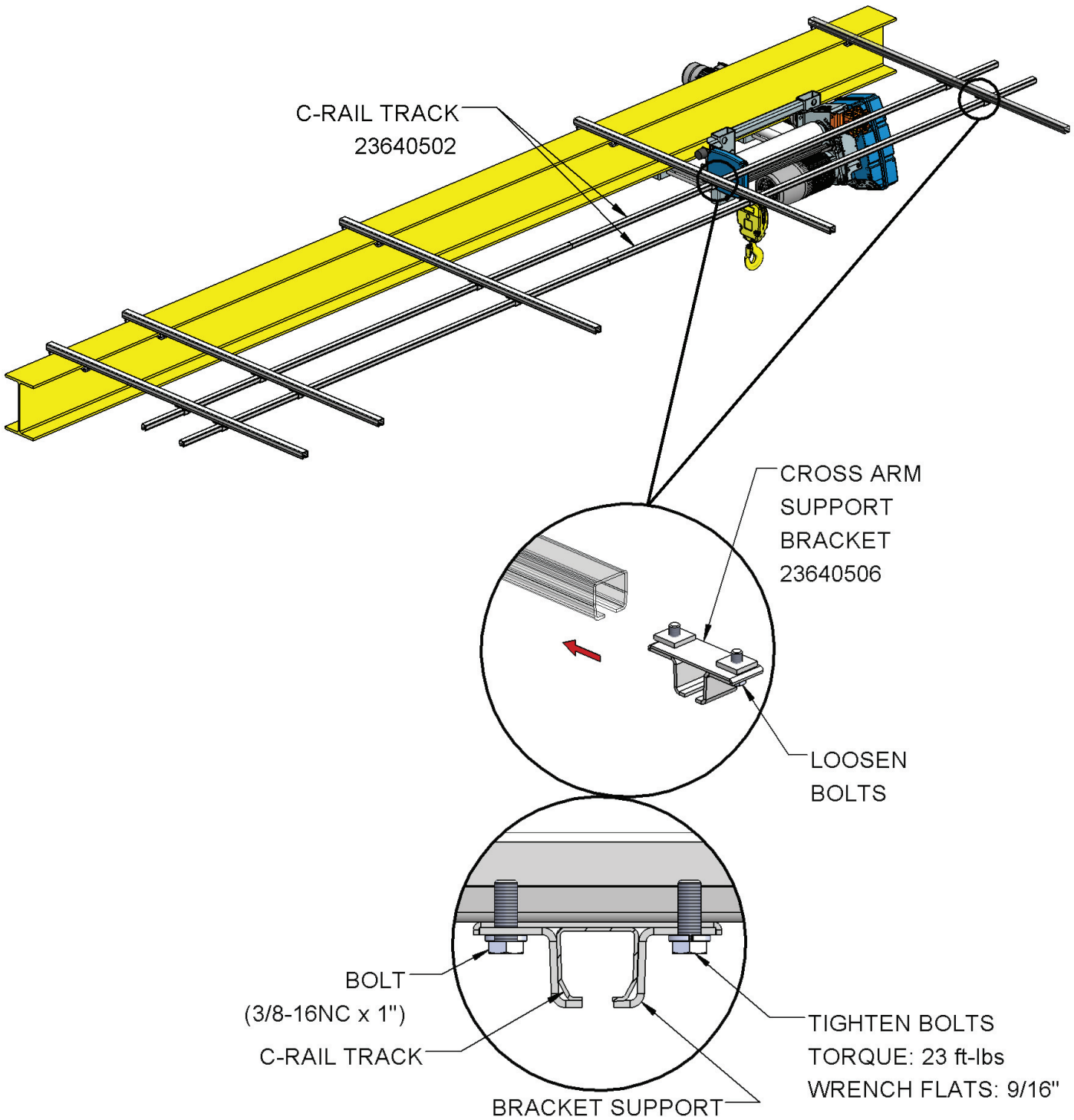

STEP 4: C-RAIL JOINT ASSEMBLY

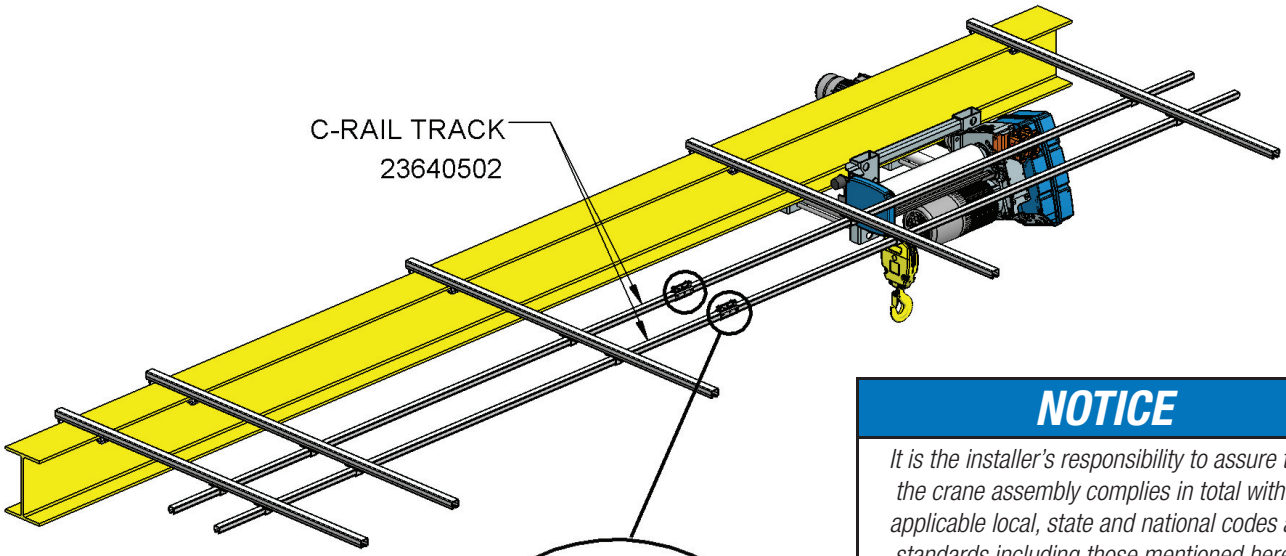

NOTICE

It is the installer's responsibility to assure that the crane assembly complies in total with all applicable local, state and national codes and standards including those mentioned herein. Crane wiring should be done by a licensed electrician and be in accordance with the National Electric Code (ANSI/NFPA 70).

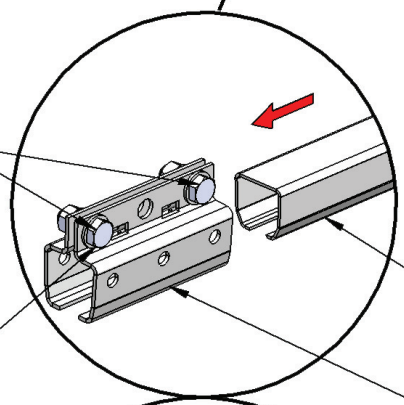

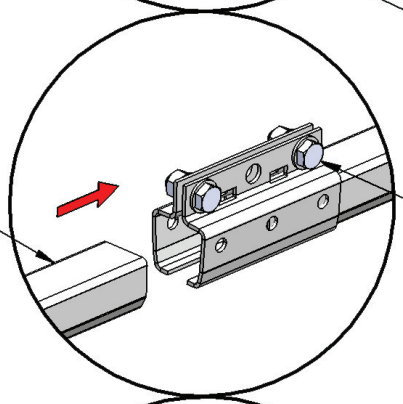

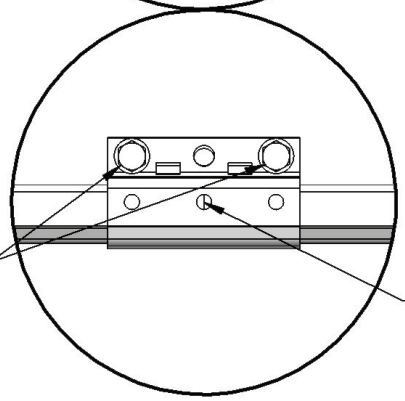

STEP 5: **MOUNTING BRIDGE PANEL**

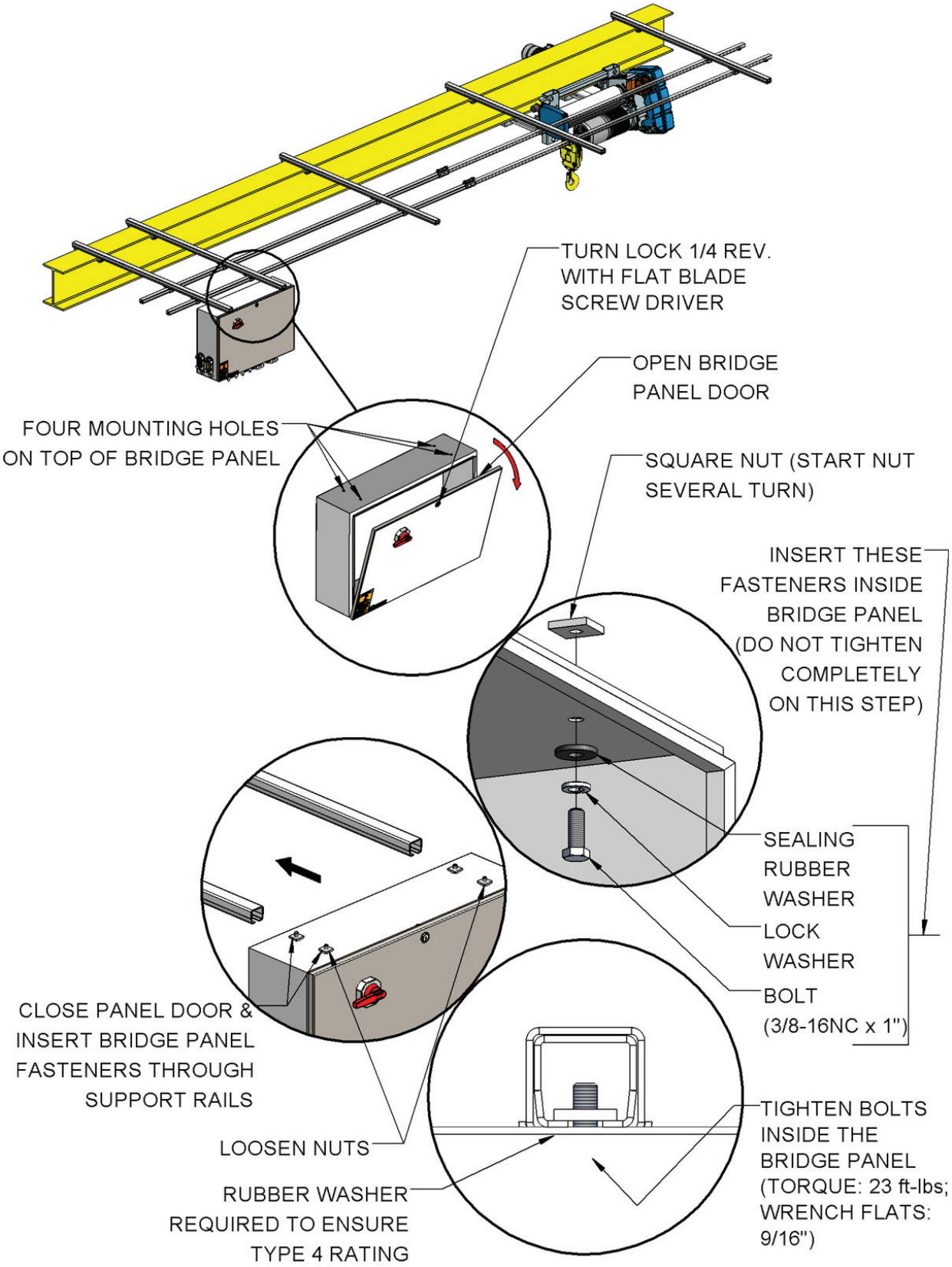

STEP 6: END STOP ASSEMBLY

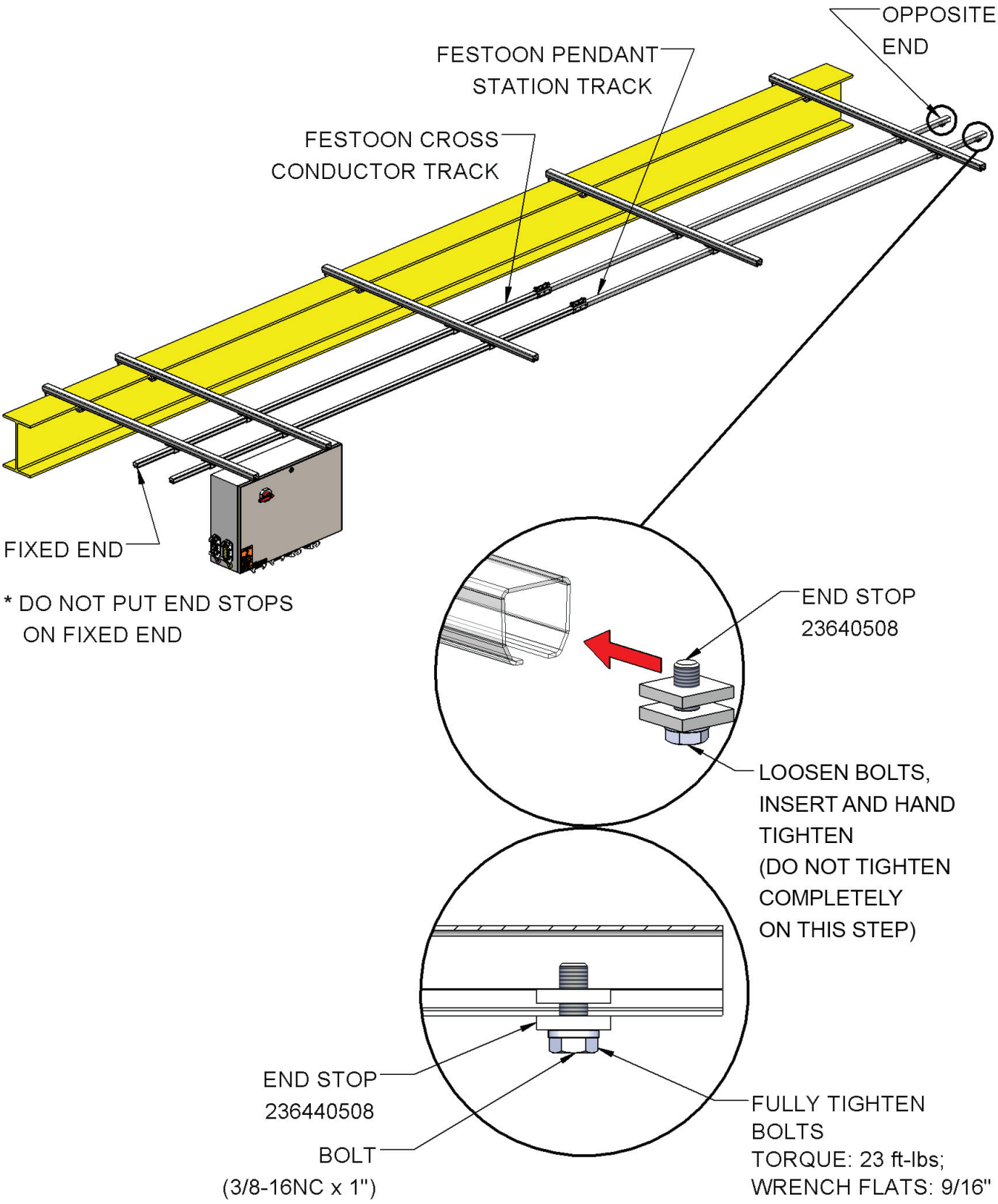

STEP 7: HOIST CABLE ASSEMBLY

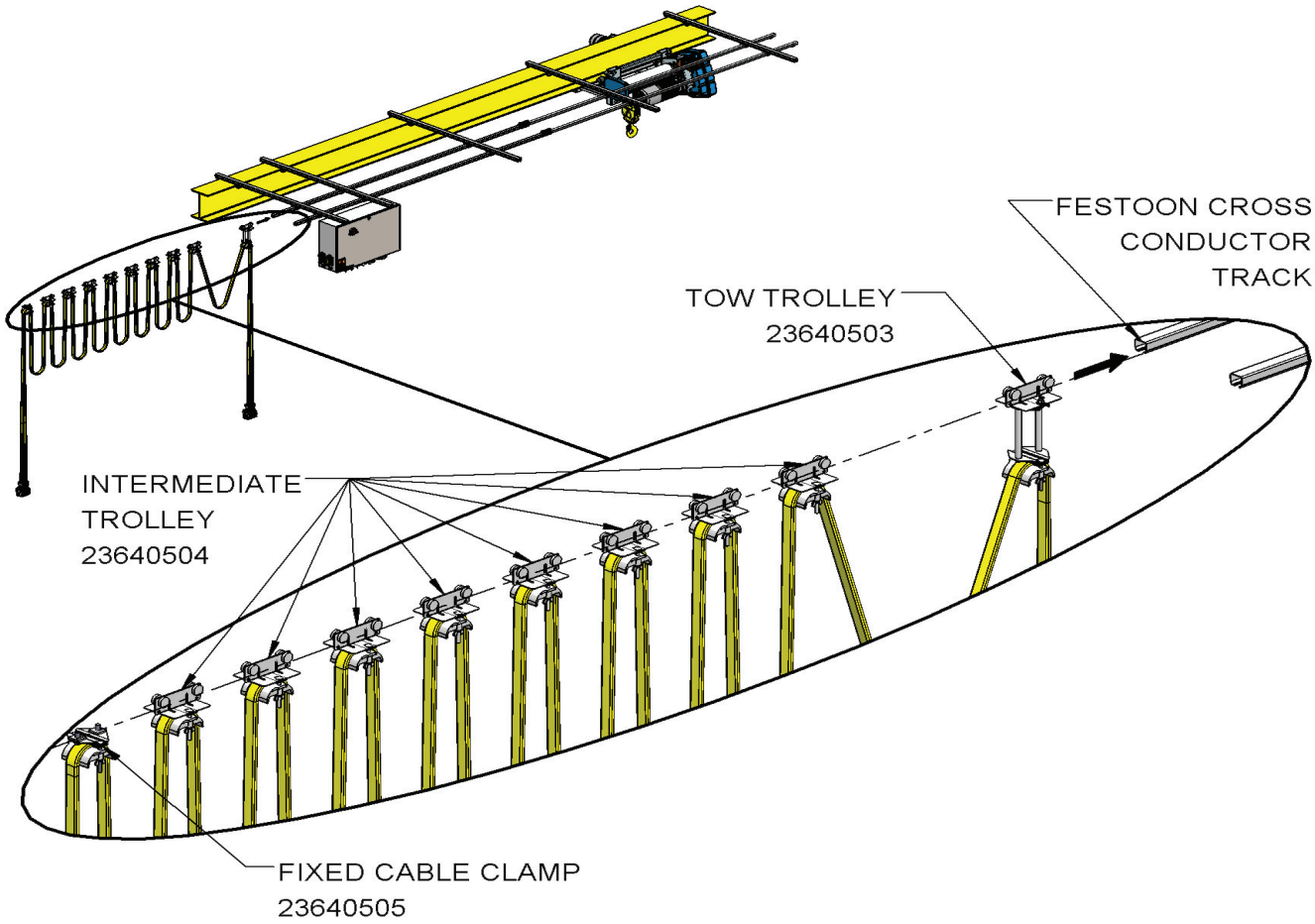

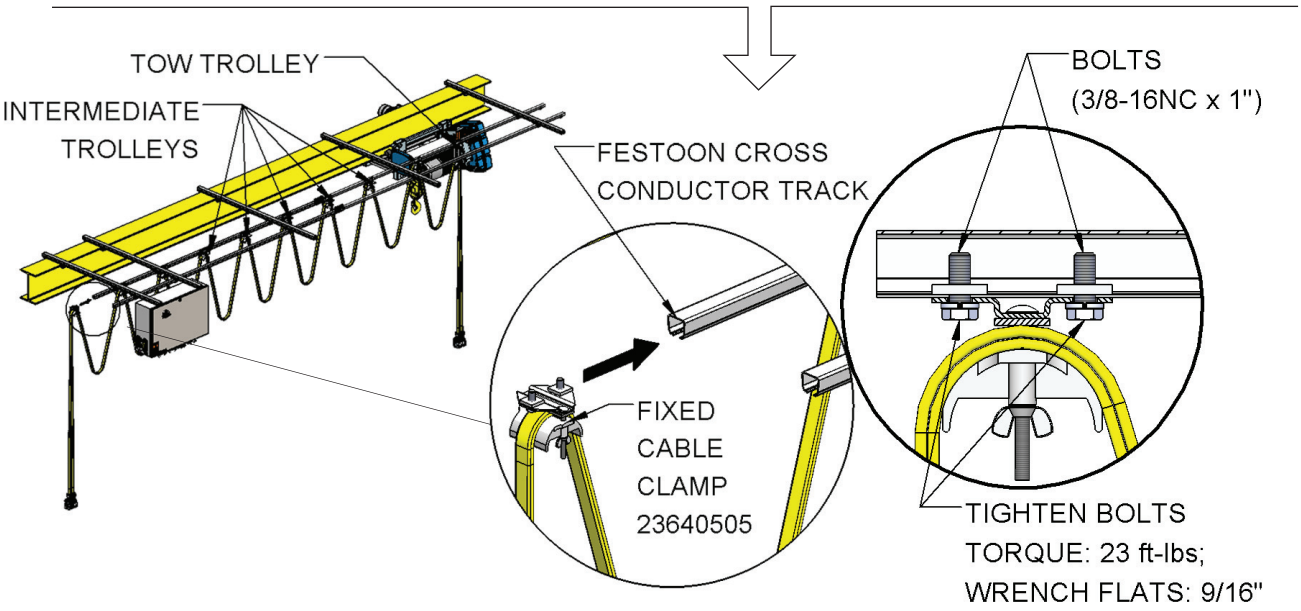

STEP 8: CONTROL PENDANT CABLE ASSEMBLY

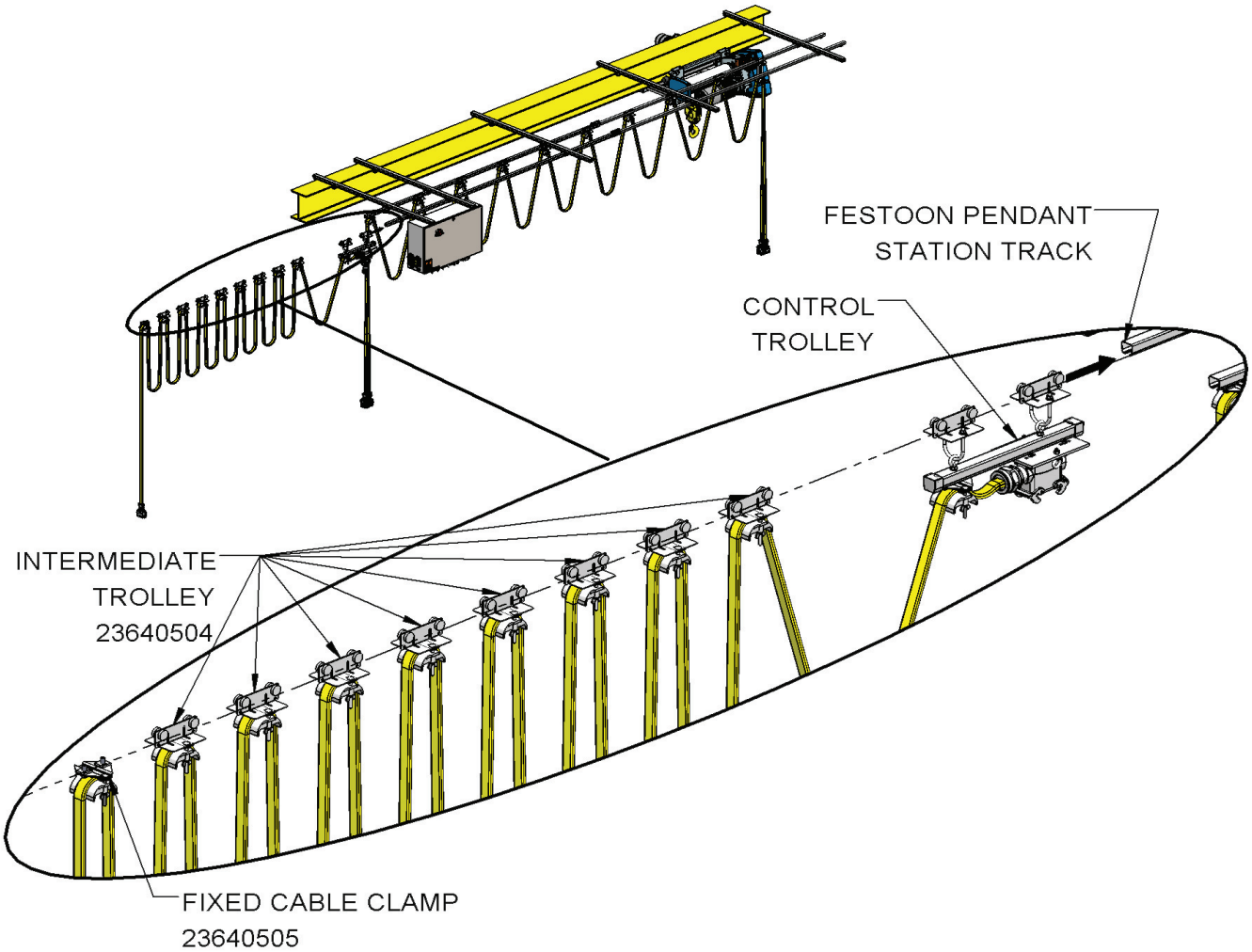

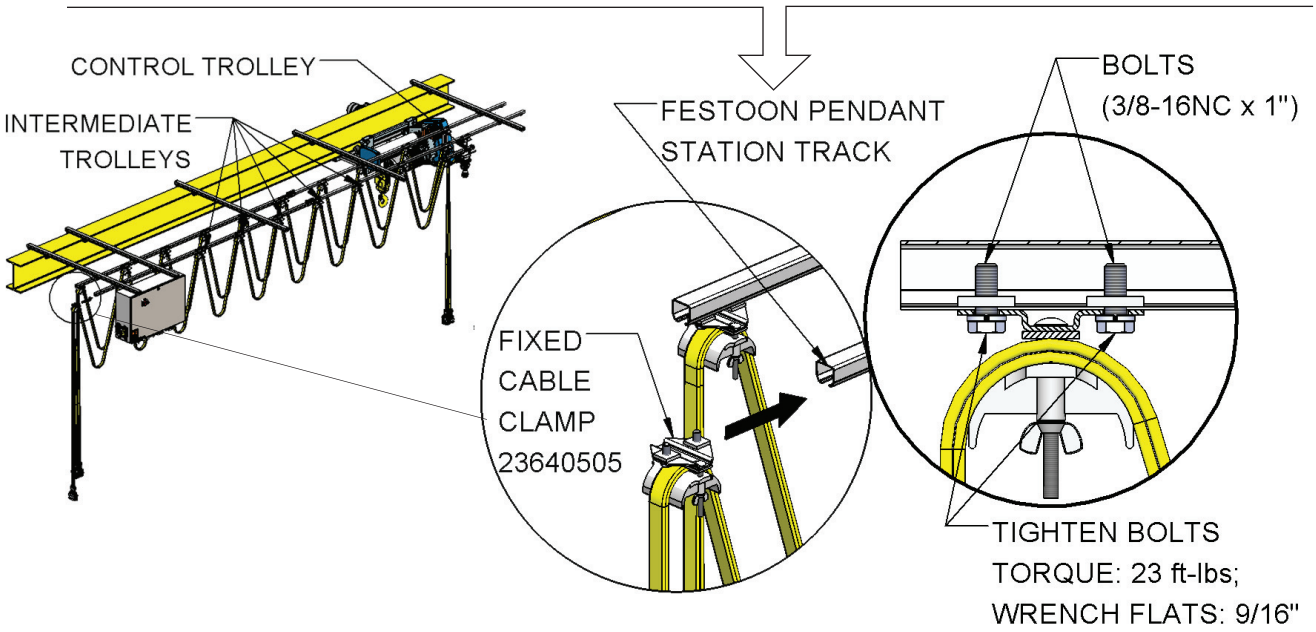

YK/SK TOW ARM

STEP 9: TOW ARM KIT PREPARATION

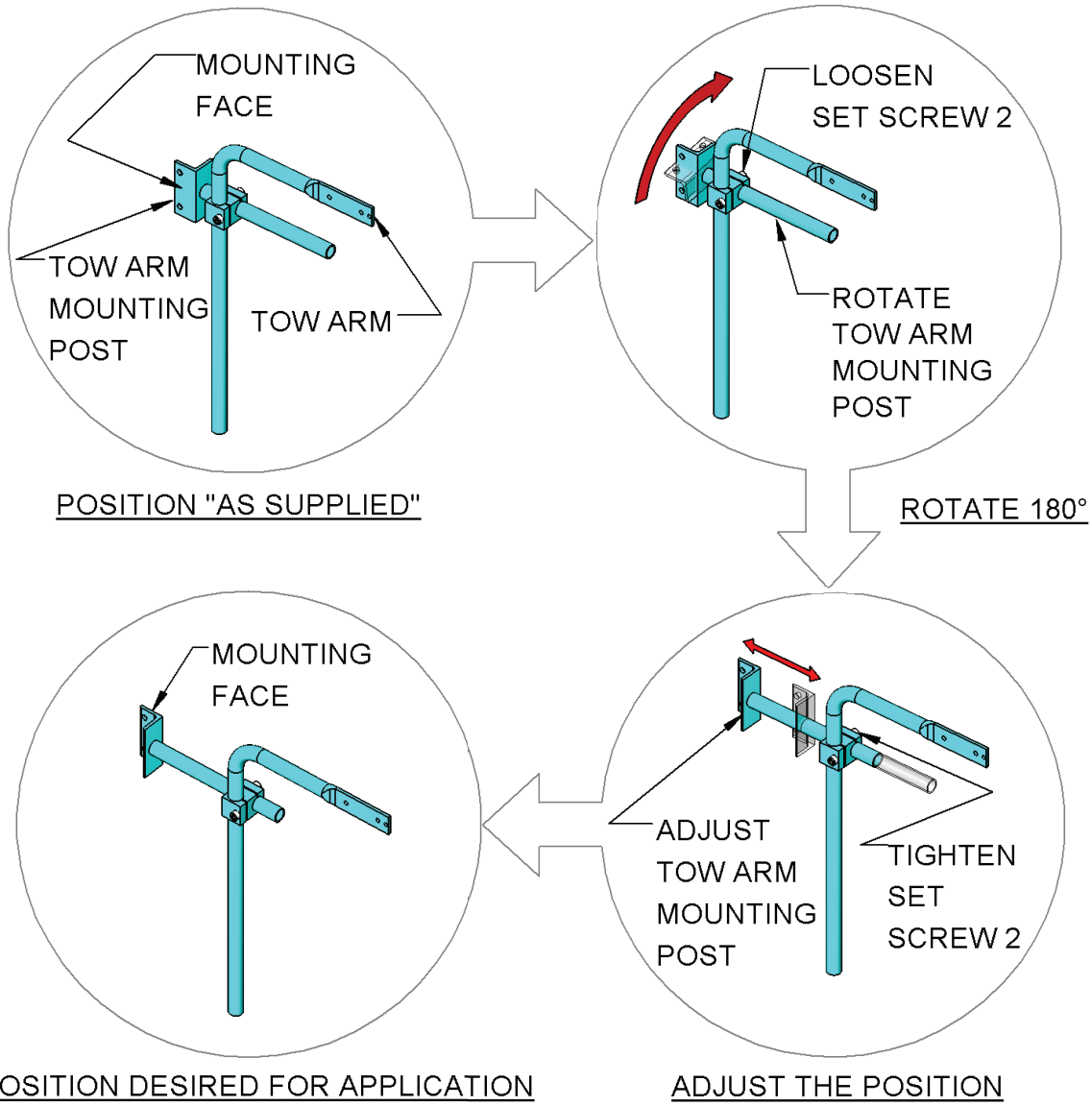

TOW ARM ADJUSTMENTS

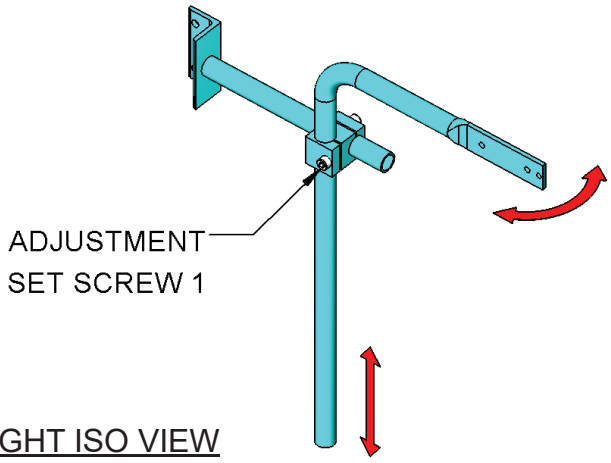

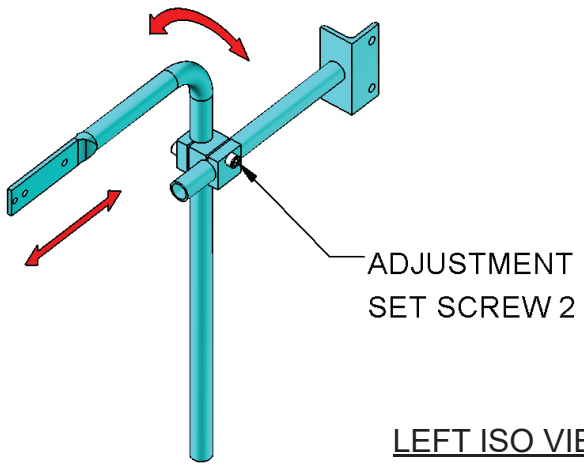

Y80/800 TOW ARM

STEP 9: TOW ARM KIT PREPARATION

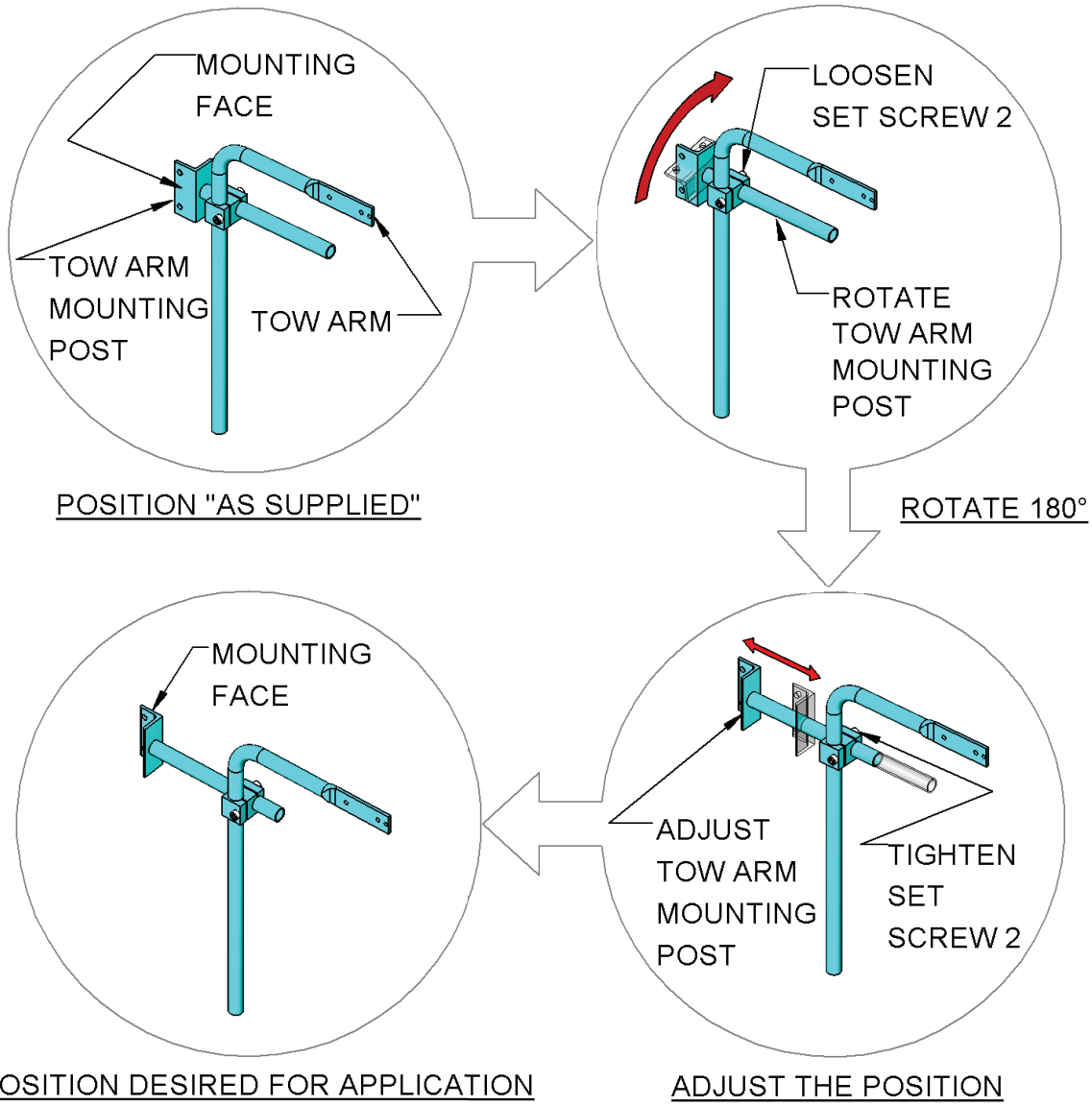

TOW ARM ADJUSTMENTS

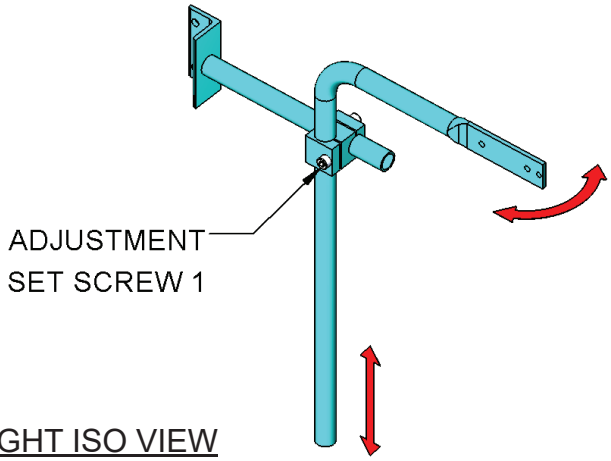

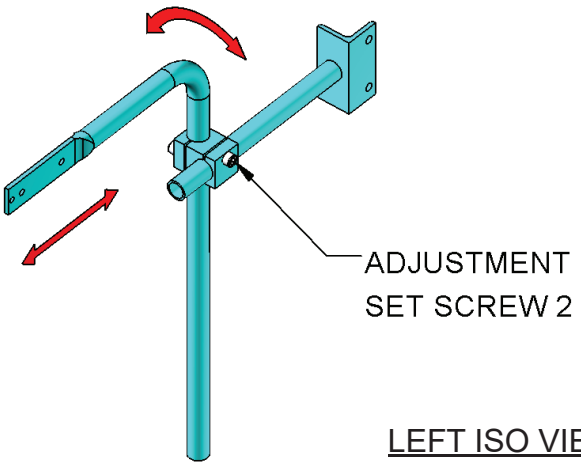

STEP 10: TOW ARM KIT INSTALLATION – YK/SK

⚠ WARNING

Alterations or modifications of equipment and use of non-factory repair parts can lead to dangerous operation and injury.

TO AVOID INJURY:
DO NOT alter or modify equipent.
DO NOT use equipment to lift, support or otherwise transport people.
DO NOT suspend unattended loads over people.

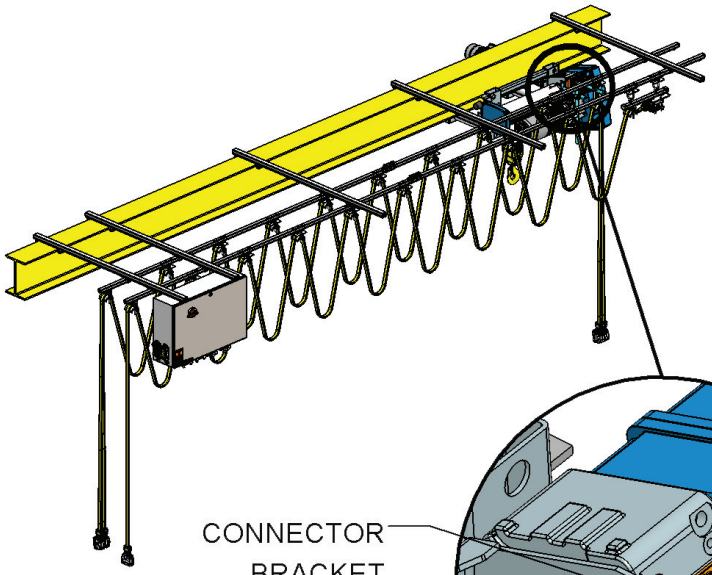

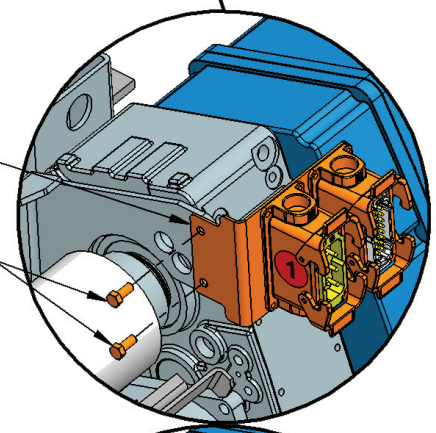

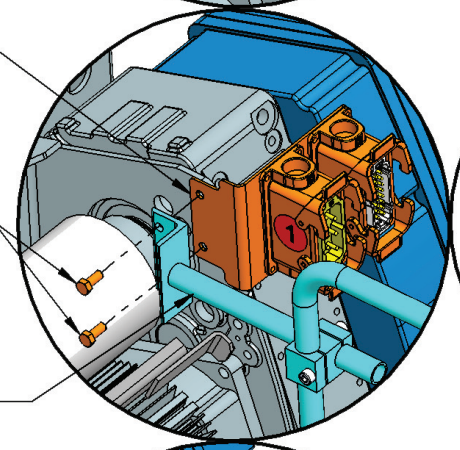

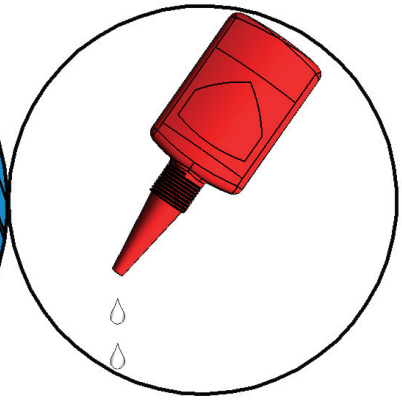

THREADLOCKER (RECOMMENDED)

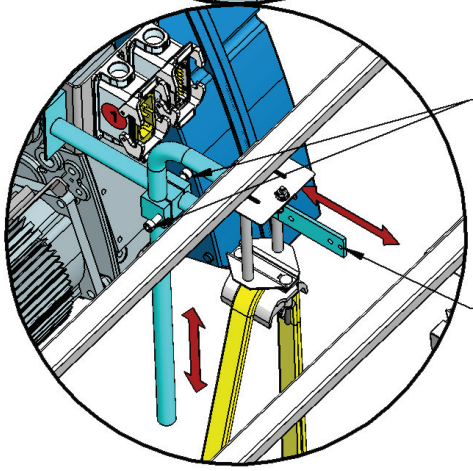

STEP 10: TOW ARM KIT INSTALLATION – Y80/800

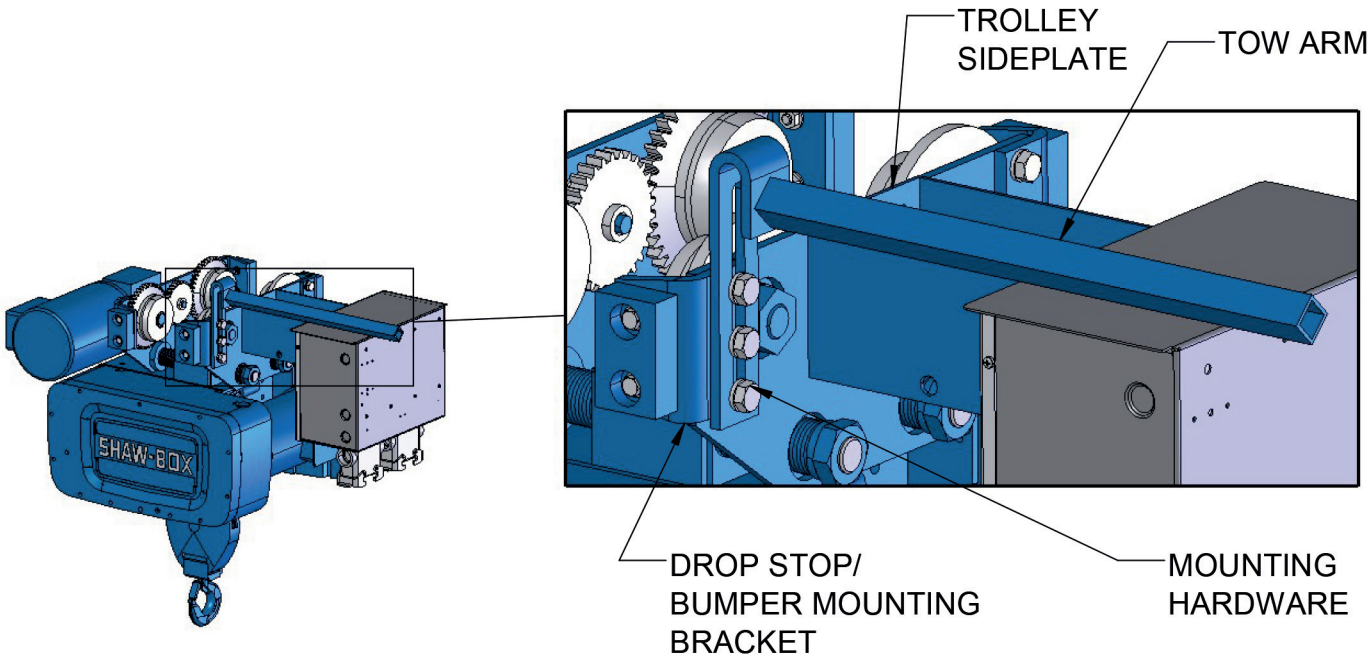

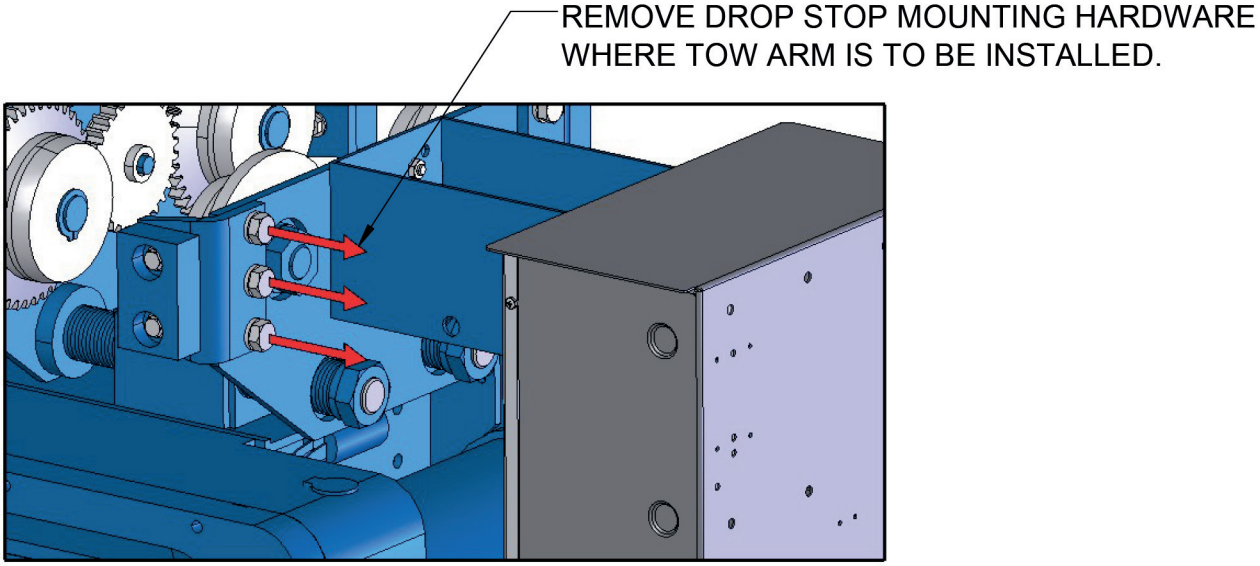

- MOUNT THE TOW ARM, LEAVING THE DROP STOP IN PLACE.
- REPLACE WITH LONGER TOW ARM HARDWARE.
- ADJUST THE HEIGHT OF THE TOW ARM PRIOR TO COMPLETELY TIGHTENING BOLTS.

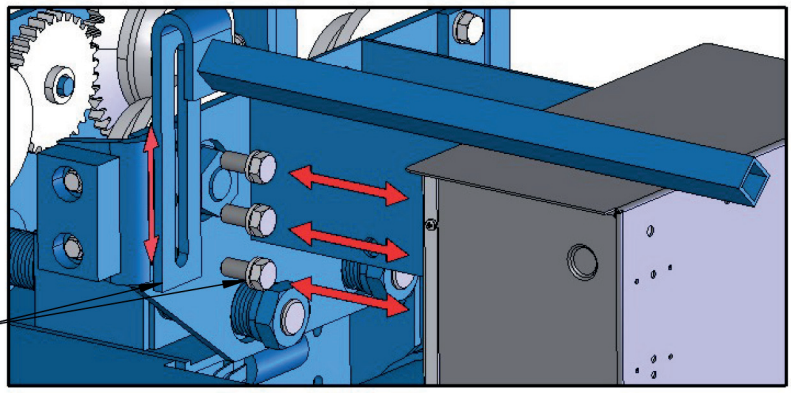

STEP 11: CABLE TRAY INSTALLATION

NOTE: WIRE TRAY IS ONLY INCLUDED WITH YK/SK PRODUCTS

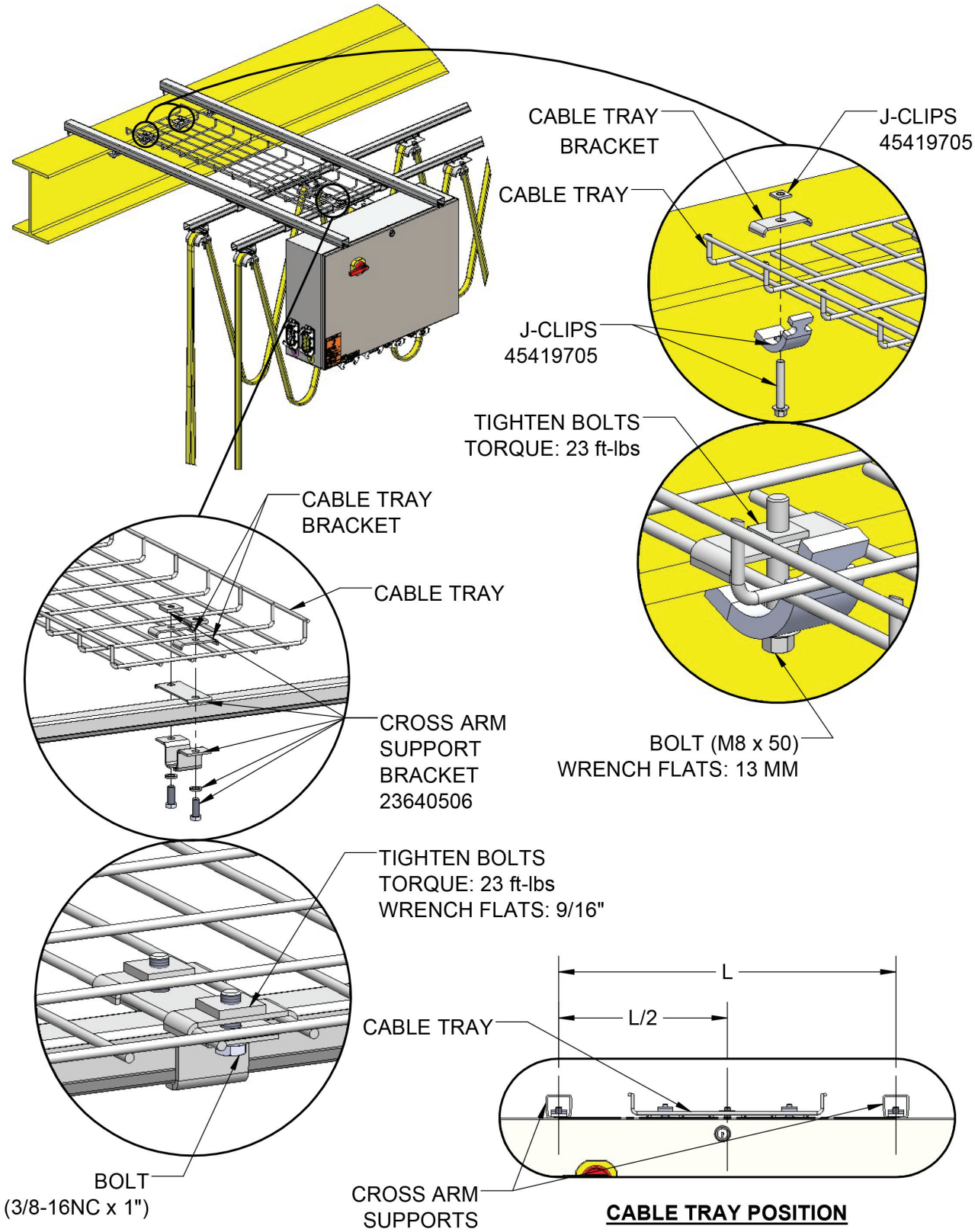

CABLE TRAY POSITION

STEP 12: PLACING FESTOON CABLES ON CABLE TRAY

NOTE: WIRE TRAY IS ONLY INCLUDED WITH YK/SK PRODUCTS

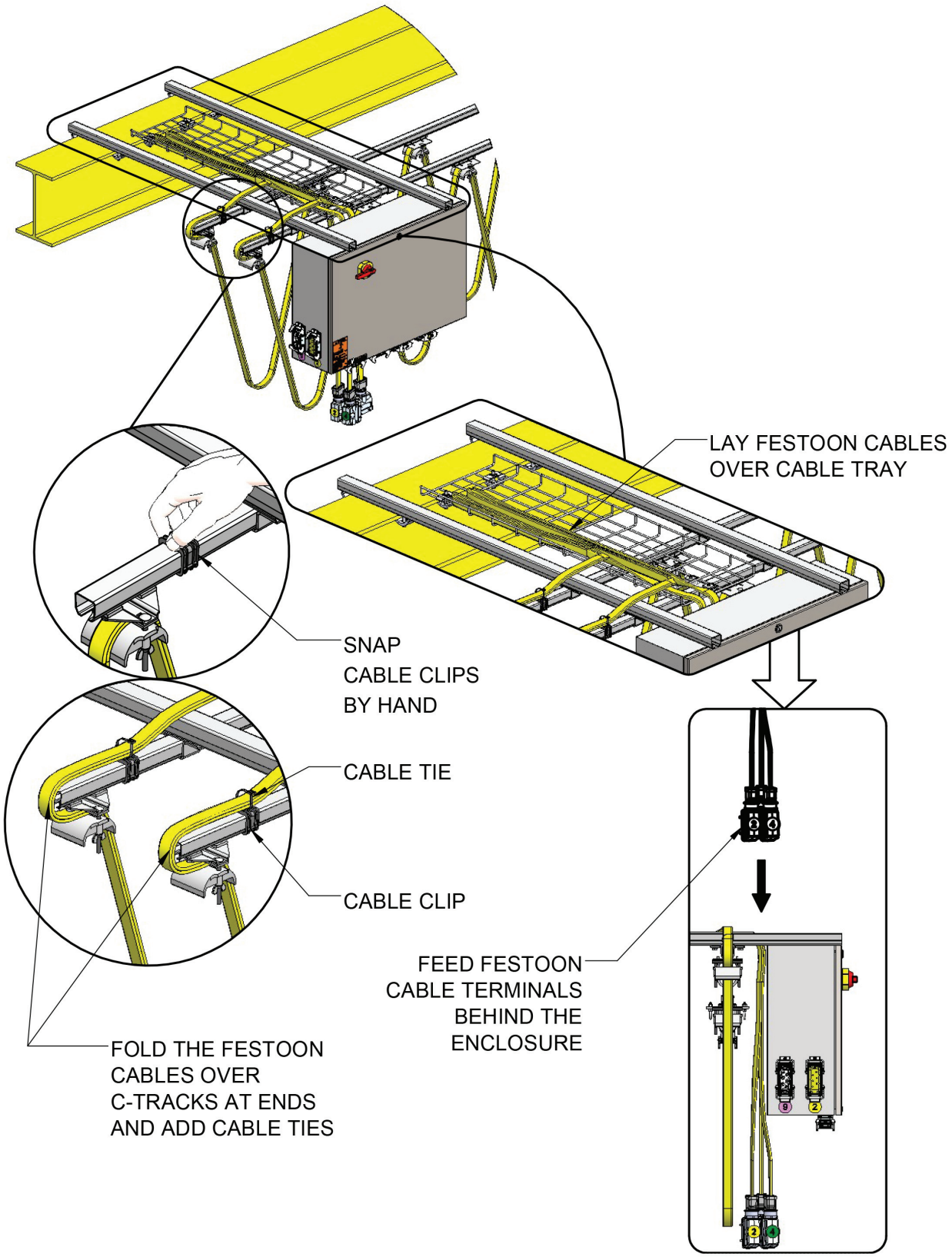

STEP 13: FESTOON CABLE CONNECTION

⚠ DANGER

Disconnect power and lockout disconnecting means before connecting power supply to hoist.

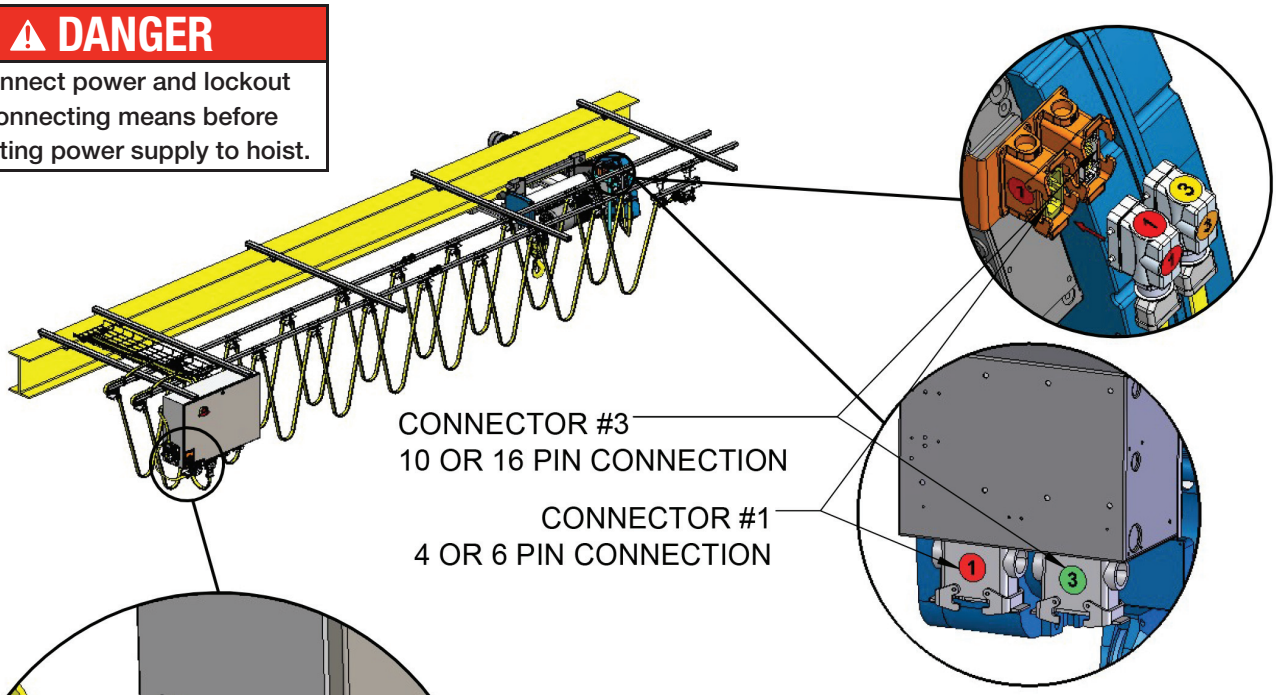

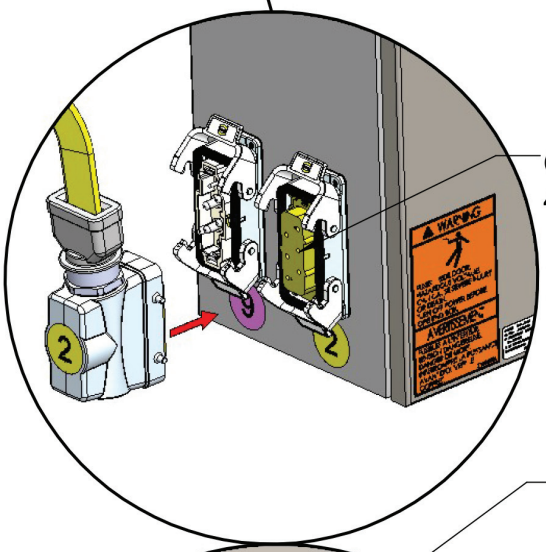

⚠ WARNING

DO NOT UNPLUG CONNECTORS WHILE CIRCUIT IS ENERGIZED.

BEFORE PLUGGING IN CONNECTORS REMOVE POWER FROM SYSTEM.

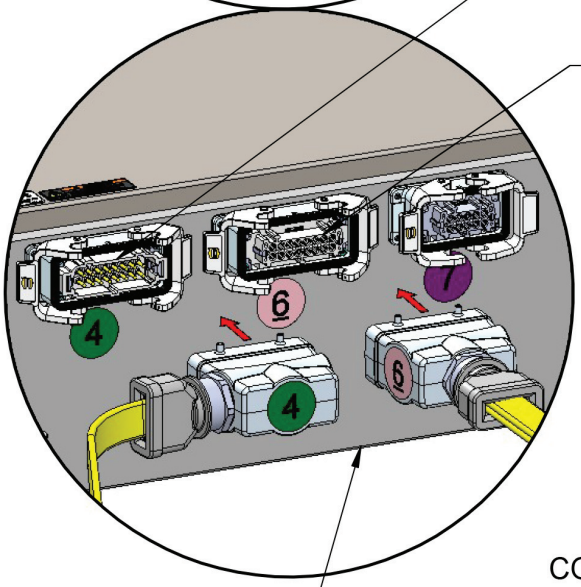

LOCKING CONNECTORS

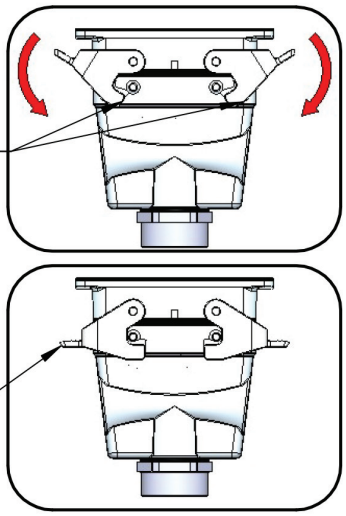

STEP 14: PUSH-BUTTON PENDANT ASSEMBLY

⚠ WARNING

DO NOT UNPLUG CONNECTORS WHILE CIRCUIT IS ENERGIZED.

BEFORE PLUGGING IN CONNECTORS REMOVE POWER FROM SYSTEM.

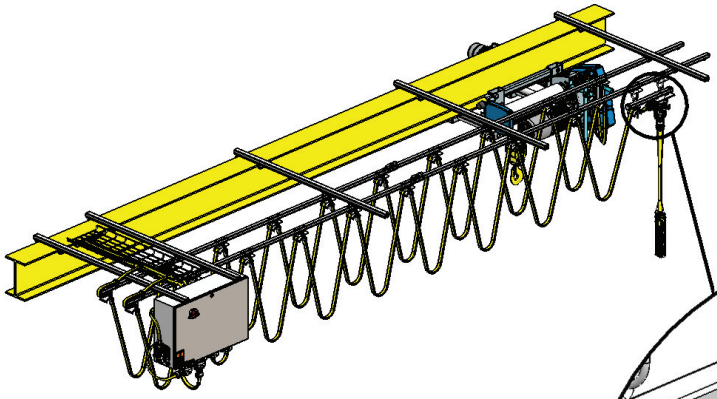

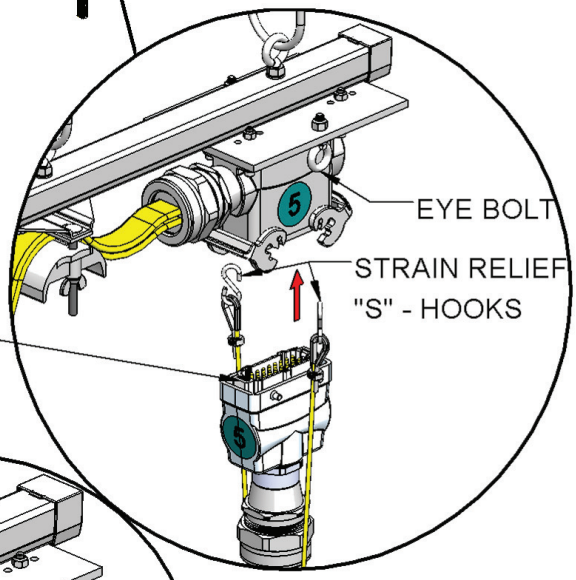

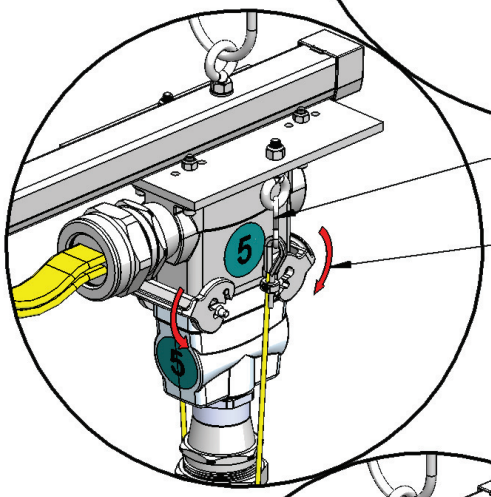

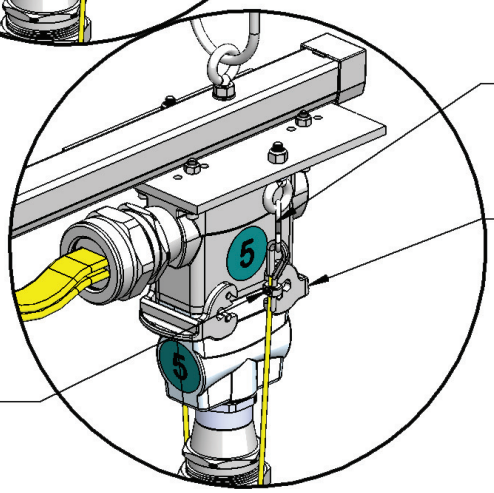

STEP 15: BRIDGE MOTOR CABLE CONNECTION

⚠ WARNING

DO NOT UNPLUG CONNECTORS WHILE CIRCUIT IS ENERGIZED.

BEFORE PLUGGING IN CONNECTORS REMOVE POWER FROM SYSTEM.

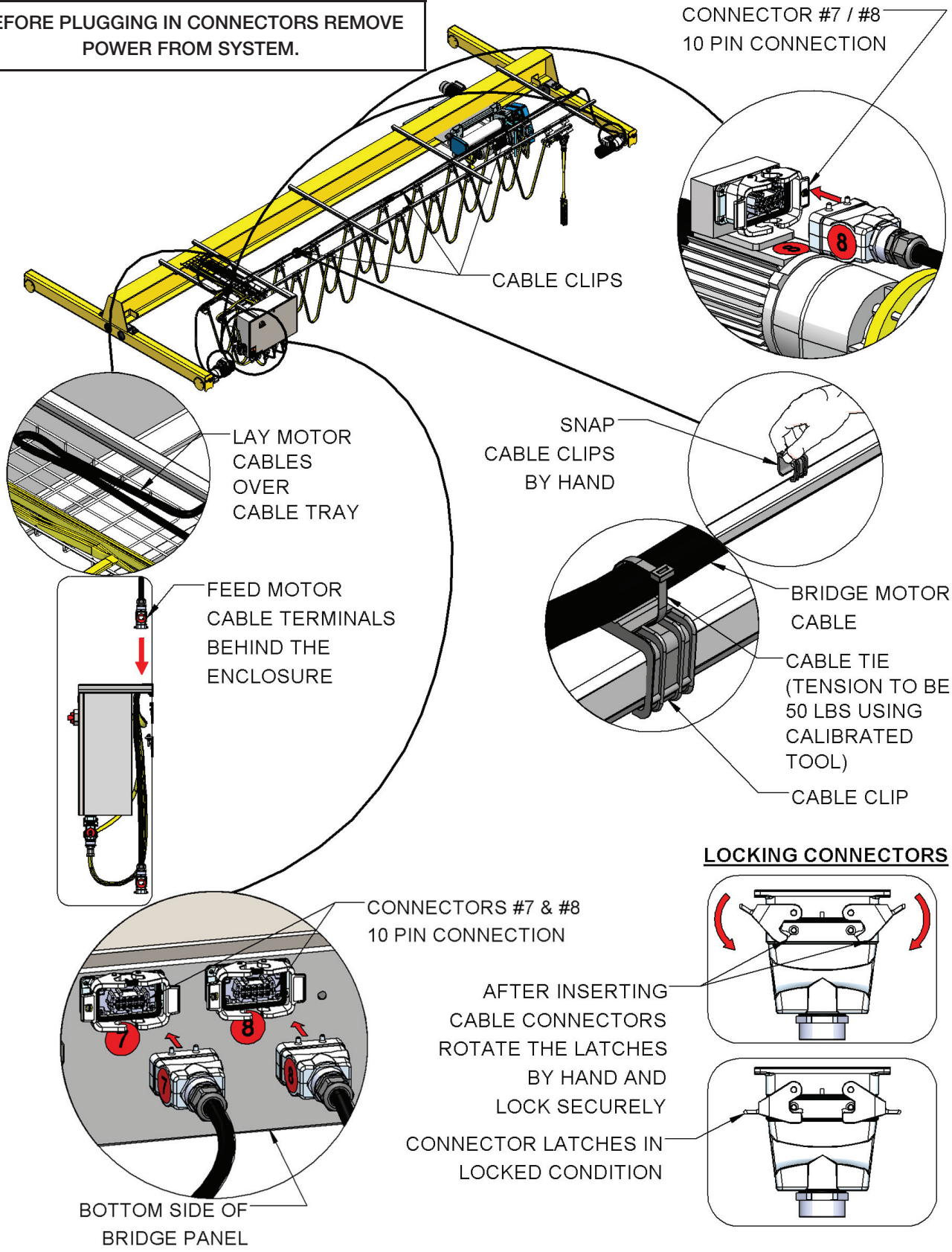

STEP 16: BRIDGE TOW ARM INSTALLATION

⚠ DANGER

Disconnect power and lockout disconnecting means before connecting power supply cable to runway electrification system.

⚠ WARNING

The trolley frame and bridge frame shall not be considered electrically grounded through the bridge and trolley wheels and its respective tracks. A fourth runway conductor and collector shall be provided for grounding.

⚠ WARNING

Verify that the crane is furnished for the same voltage, frequency and phase as the runway power supply. Crane voltage is shown on nameplate on bridge panel. Do not operate crane until "Start Up and Pre-Operational Inspection" are made.

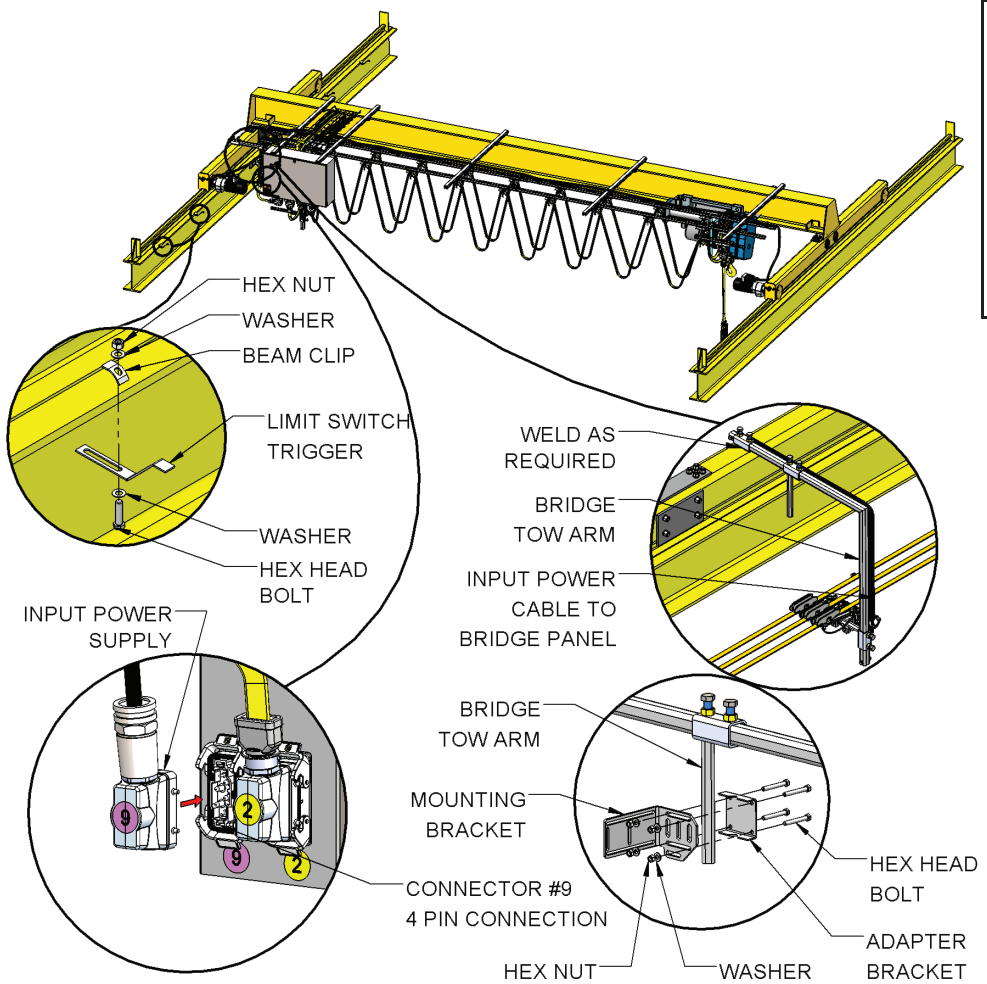

TRAVEL LIMIT SWITCH TRIGGER MOUNTING LOCATION

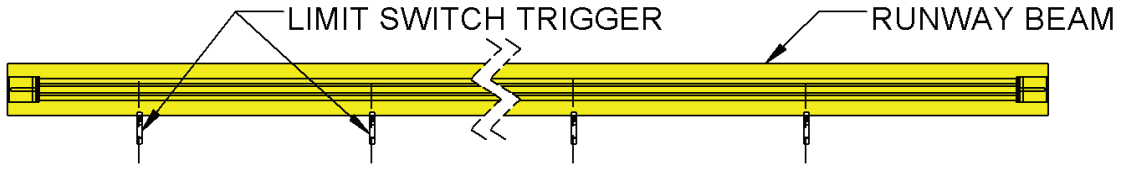

X	Z	Z	Y
X = STOP LEFT	Z = FAST / SLOW		Y = STOP RIGHT

STEP 17: BRIDGE TRAVEL LIMIT SWITCH INSTALLATION

NOTE: BRIDGE TRAVEL LIMIT SWITCH ONLY INCLUDED WITH YK/SK PRODUCTS

⚠ WARNING

Damage to the hoist, a dropped load, and injury may result if limit switches fail due to improper use. Under normal operating conditions, stop hoist travel before engaging limit switches. Limit switches are safety devices and should not be used as normal operating control.

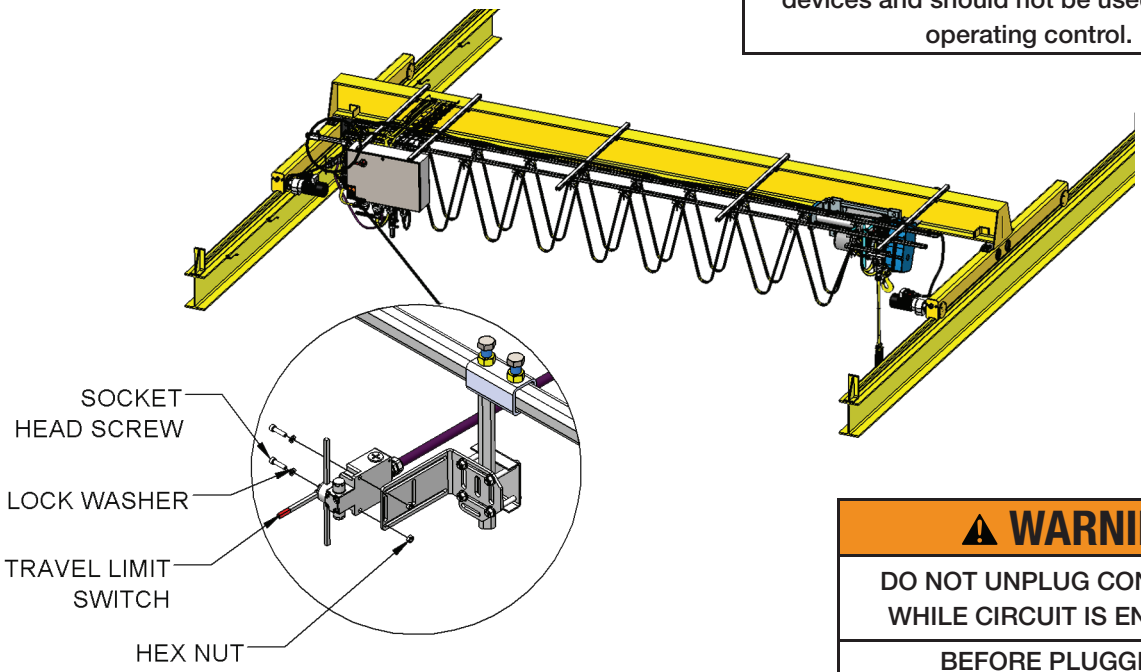

⚠ WARNING

DO NOT UNPLUG CONNECTORS WHILE CIRCUIT IS ENERGIZED.

BEFORE PLUGGING IN CONNECTORS REMOVE POWER FROM SYSTEM.

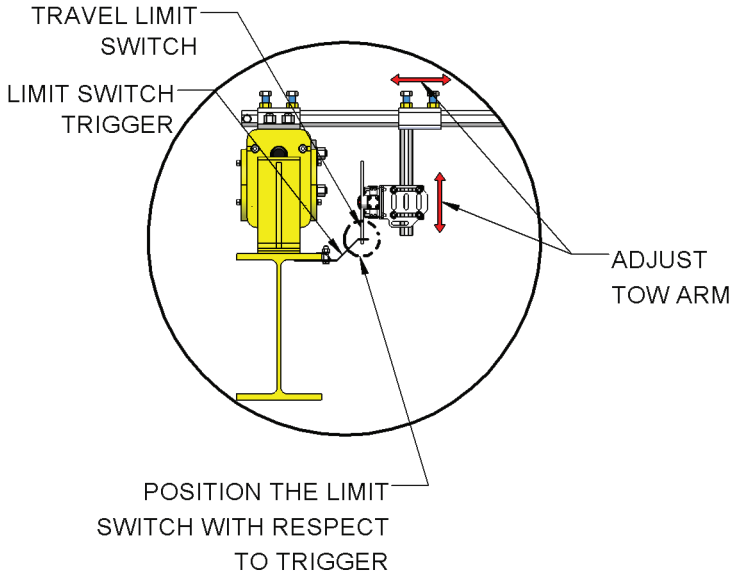

STEP 18: FESTOON RUNWAY CHECKING

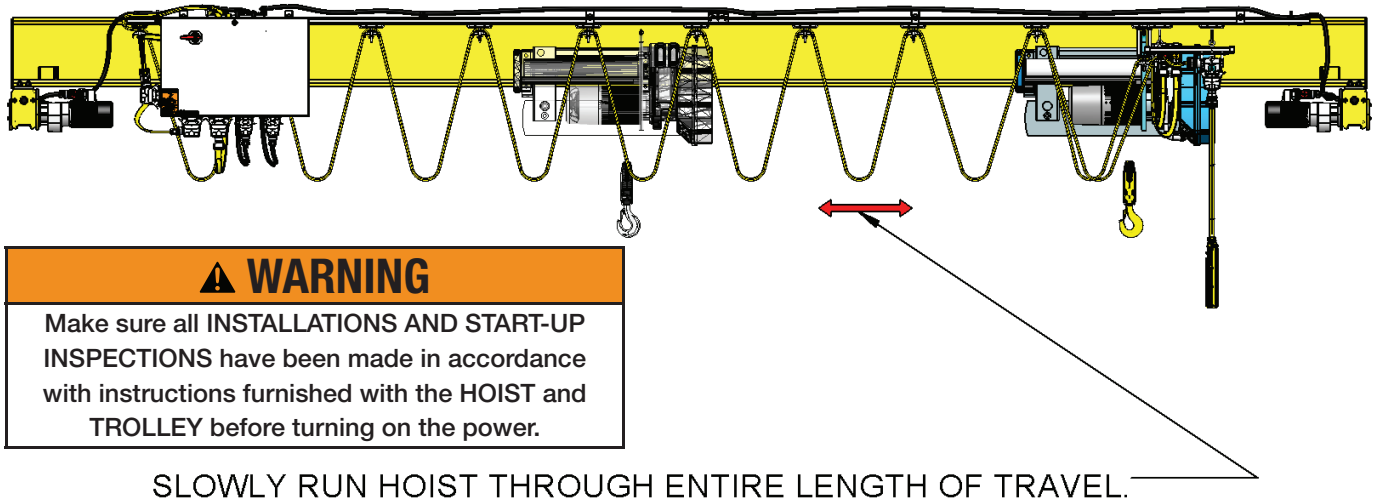

⚠ WARNING

Make sure all INSTALLATIONS AND START-UP INSPECTIONS have been made in accordance with instructions furnished with the HOIST and TROLLEY before turning on the power.

SLOWLY RUN HOIST THROUGH ENTIRE LENGTH OF TRAVEL. CHECK FOR BINDING IN THE TOW TROLLEY OPENING OR OBSTRUCTION TO TOW ARM

⚠ WARNING

Trolley stops (clip angles) or end stop assemblies must be installed on both ends of the bridge beam to prevent hoist trolley from running off the end of the beam, which could result in injury to the operator and others and damage to the load and other property.

STEP 19: ADDING CABLE TIES

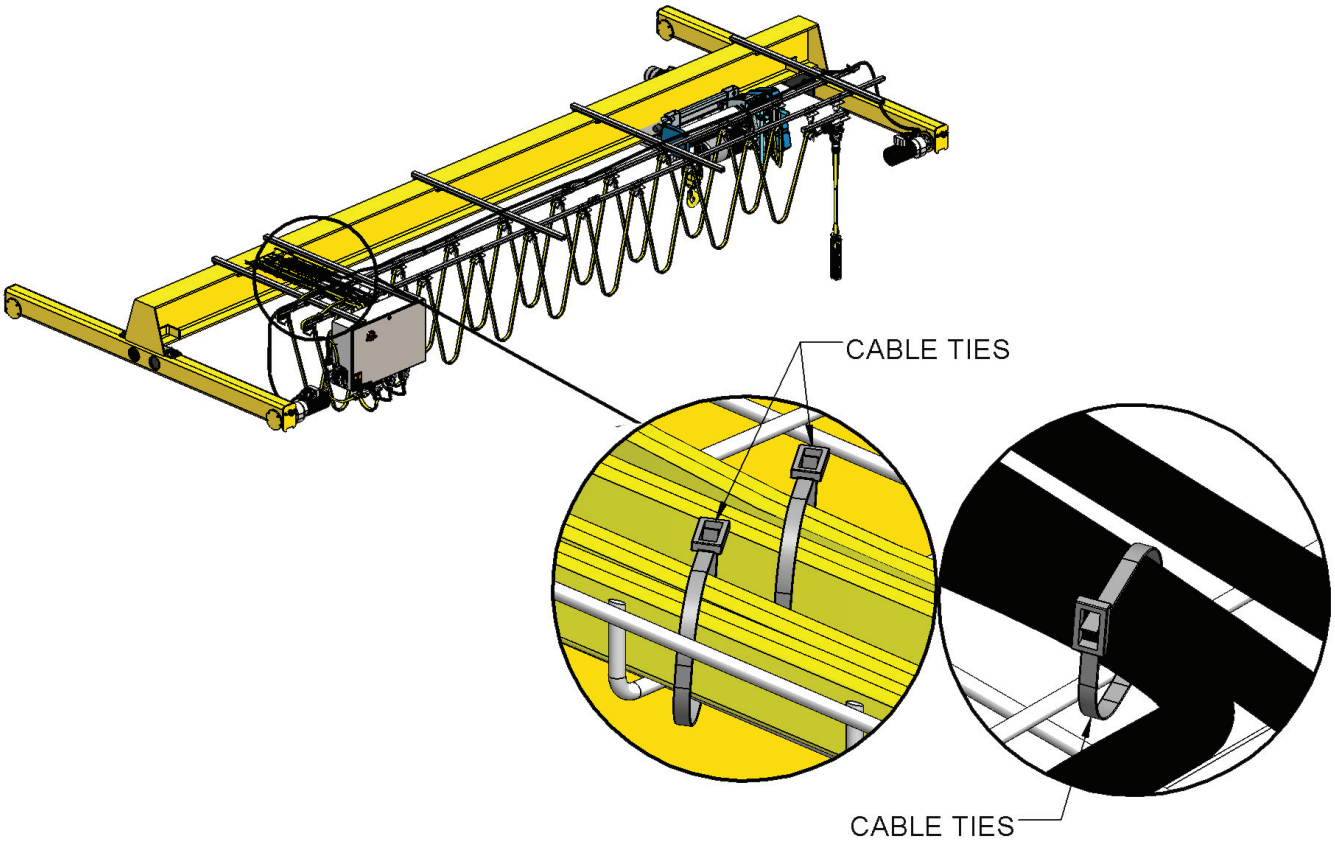

CHAPTER 7
RADIO CONTROL & HORN INSTALLATION FOR FESTOON SYSTEM

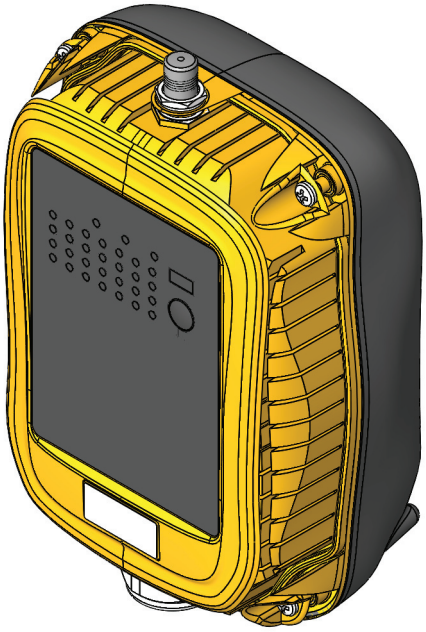

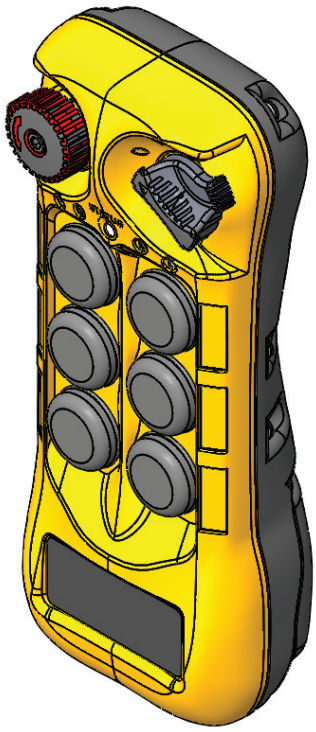

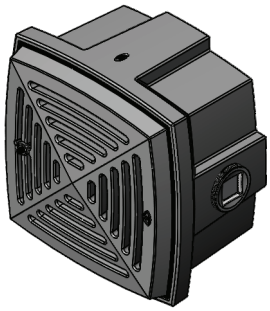

STEP 1: CROSS ARM & BRACKET INSTALLATION FOR RADIO CONTROL

NOTE: MOUNTING BRACKET AND CROSS ARM ONLY INCLUDED WITH YK/SK PRODUCTS

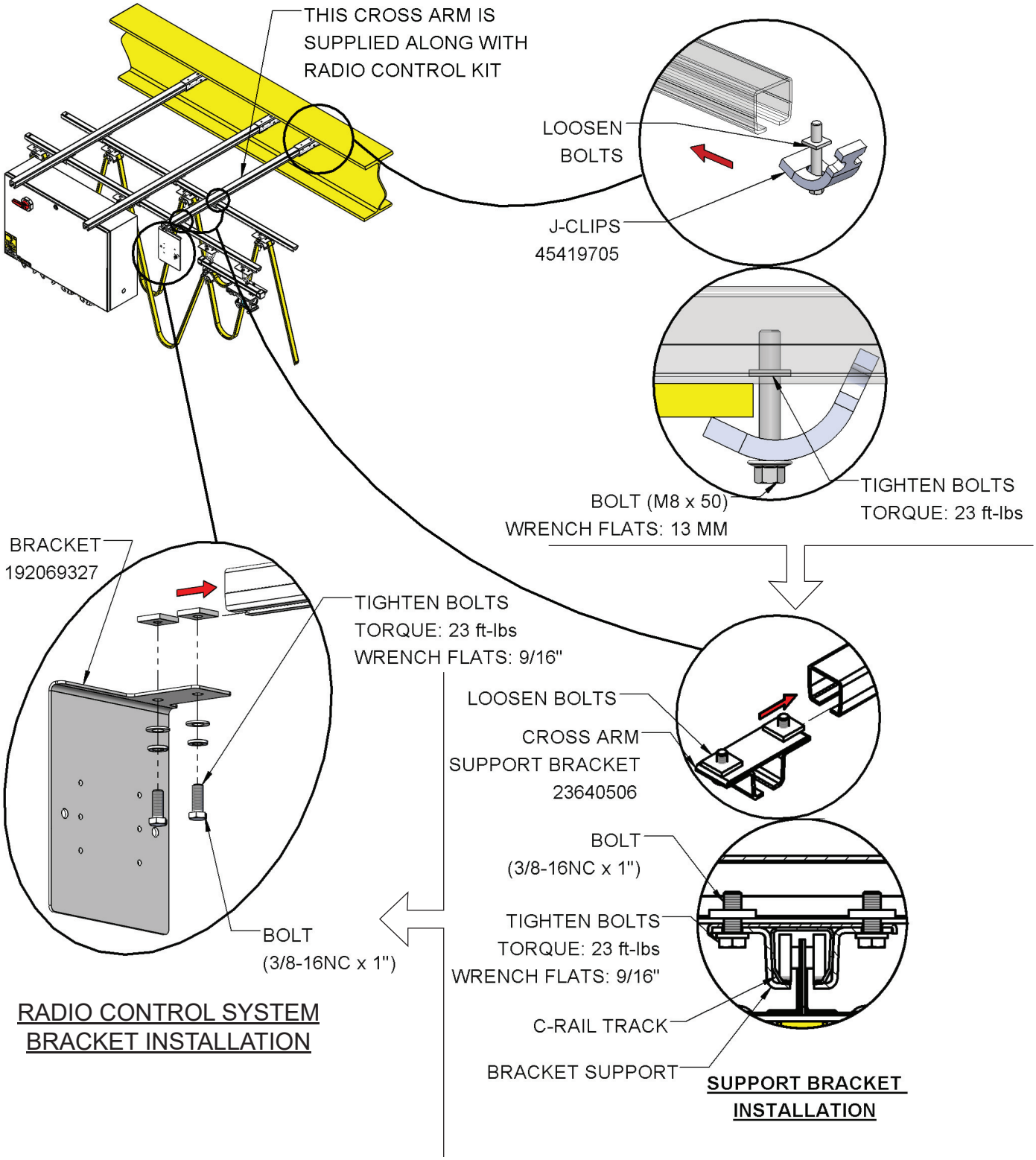

RADIO CONTROL SYSTEM BRACKET INSTALLATION

SUPPORT BRACKET INSTALLATION

STEP 2: RADIO CONTROL SYSTEM INSTALLATION

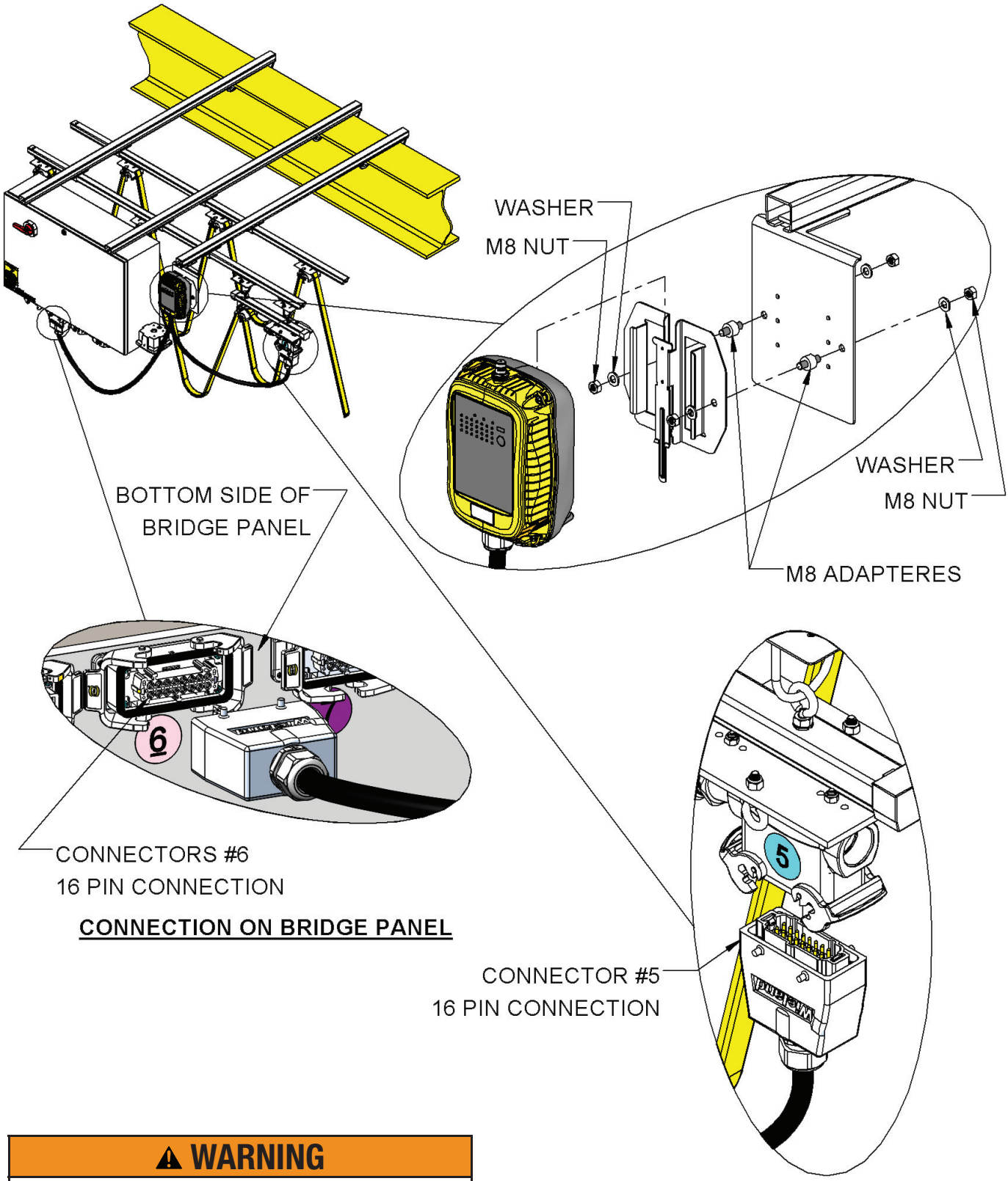

CONNECTION ON BRIDGE PANEL

CONNECTION ON FESTOON CONTROL TROLLEY (AS REQUIRED)

⚠ WARNING
DO NOT UNPLUG CONNECTORS WHILE CIRCUIT IS ENERGIZED.
BEFORE PLUGGING IN CONNECTORS REMOVE POWER FROM SYSTEM.

STEP 3: HORN INSTALLATION (INTERNAL/EXTERNAL)

⚠ DANGER

Disconnect power and lockout disconnecting means before installing internal or external horn.

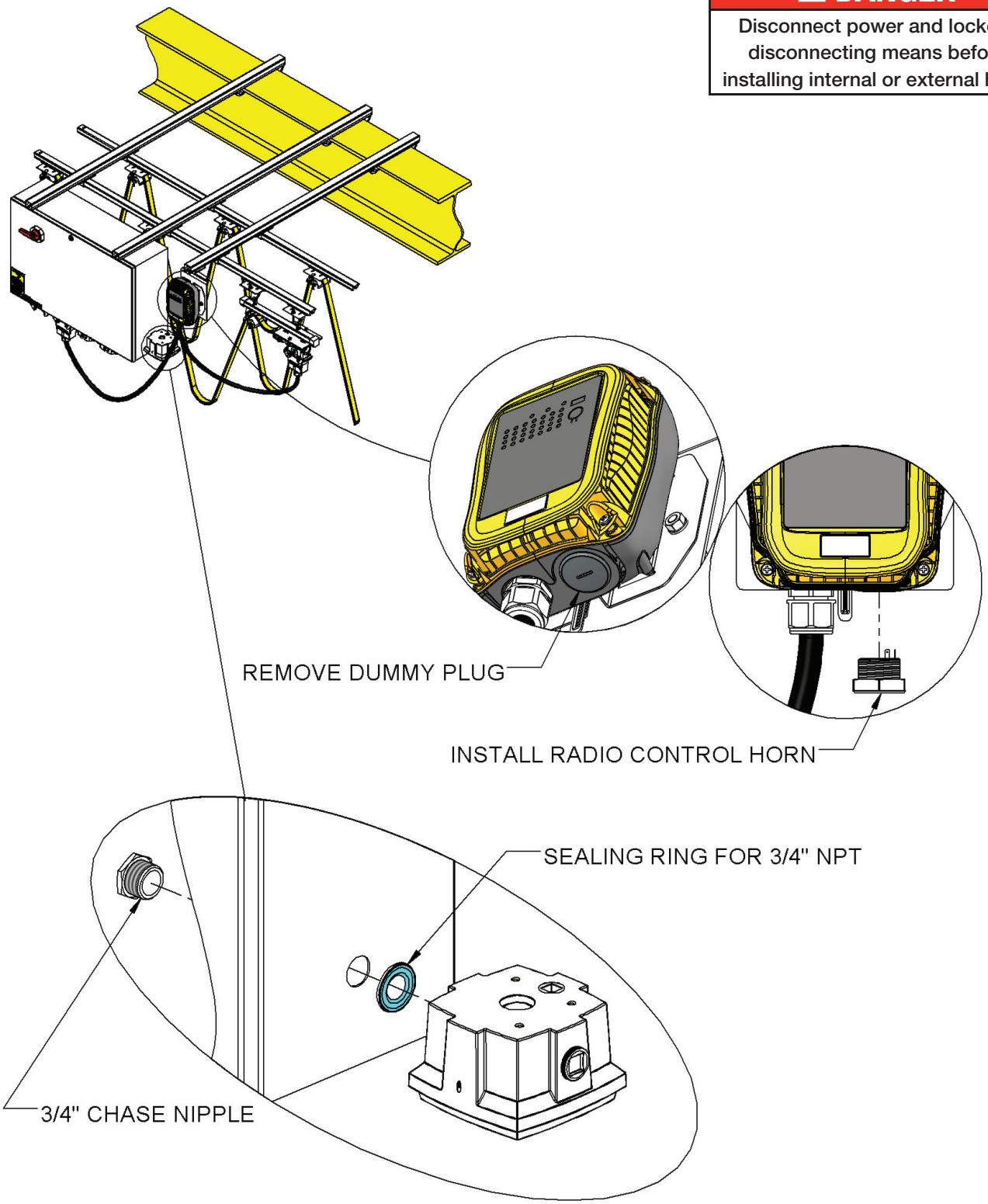

EXTERNAL HORN INSTALLATION

NOTES:

WARRANTY

LIMITATION OF WARRANTIES, REMEDIES, AND DAMAGES

INDEMNIFICATION AND SAFE OPERATION

Buyer shall comply with and require its employees to comply with directions set forth in instructions and manuals furnished by Seller and shall use and require its employees to follow such instructions and manuals and to use reasonable care in the use and maintenance of the Goods and any Replacement Parts. Buyer shall not remove or permit anyone to remove any warning or instruction signs on the Goods or Replacement Parts. In the event of personal injury or damage to property or business arising from the use of the Goods or Replacement Parts, Buyer shall within 48 hours thereafter give Seller written notice of such injury or damage. Buyer shall cooperate with Seller in investigating any such injury or damage and in the defense of any claims arising therefrom.

If Buyer fails to comply with this section or if any injury or damage is caused, in whole or in part, by Buyer's failure to comply with applicable federal or state laws, rules or regulations safety requirements, Buyer shall indemnify and hold Seller harmless against any claims, loss or expense for injury or damage arising from the use of the Goods and/or Replacement Parts.

CMCO Warranty (HOISTS)

A. Columbus McKinnon Corporation ("Seller") warrants to the original end-user ("Buyer") that, for a period of one (1) year from the date of Seller's delivery of the goods (collectively, the "Goods") to the carrier, the Goods will be free from defects in workmanship and materials... In addition, Seller warrants to Buyer that, for a period of one (1) year from the date of their delivery by Seller to the carrier, any aftermarket or replacement parts, accessories or components purchased by Buyer with respect to any Goods (collectively, "Replacement Parts") will be free from defects in workmanship and materials.

B. IN THE EVENT OF ANY BREACH OF ANY SUCH WARRANTY, SELLER'S SOLE OBLIGATION SHALL BE EXCLUSIVELY LIMITED TO, AT THE OPTION OF SELLER, REPAIR OR REPLACEMENT, F.O.B. SELLER'S POINT OF SHIPMENT, OF ANY GOODS OR REPLACEMENT PARTS THAT SELLER DETERMINES TO HAVE BEEN DEFECTIVE OR, IF SELLER DETERMINES THAT SUCH REPAIR OR REPLACEMENT IS NOT FEASIBLE, TO A REFUND OF THE PURCHASE PRICE UPON RETURN OF THE OR REPLACEMENT PARTS TO SELLER. NO CLAIM AGAINST SELLER FOR ANY BREACH OF (i) SUCH WARRANTY WITH RESPECT TO THE ELECTRICAL COMPONENTS OF ANY GOOD OR ANY REPLACEMENT PARTS, SHALL BE VALID OR ENFORCEABLE UNLESS BUYER'S WRITTEN NOTICE THEREOF IS RECEIVED BY SELLER WITHIN ONE (1) YEAR FROM THE DATE OF SELLER'S DELIVERY TO THE CARRIER AND (ii) SUCH WARRANTY WITH RESPECT TO THE MECHANICAL COMPONENTS OF ANY GOOD SHALL BE VALID OR ENFORCEABLE UNLESS BUYER'S WRITTEN NOTICE THEREOF IS RECEIVED BY SELLER WITHIN ONE (1) YEAR FROM THE DATE ANY ALLEGED CLAIM ACCRUES. EXCEPT FOR THE WARRANTIES SET FORTH ABOVE, SELLER MAKES NO OTHER WARRANTIES WITH RESPECT TO THE GOODS OR ANY REPLACEMENT PARTS, WHETHER EXPRESSED OR IMPLIED, INCLUDING ANY WARRANTIES OF MERCHANTABILITY, FITNESS FOR A PARTICULAR PURPOSE, QUALITY AND/OR THOSE ARISING BY STATUTE OR OTHERWISE BY LAW OR FROM ANY COURSE OF DEALING OR USE OF TRADE, ALL OF WHICH ARE HEREBY EXPRESSLY DISCLAIMED.

C. IN NO EVENT SHALL SELLER BE LIABLE TO BUYER OR ANY THIRD PARTY WITH RESPECT TO ANY GOOD OR REPLACEMENT PART, WHETHER, IN CONTRACT, TORT OR OTHER THEORY OF LAW, FOR LOSS OF PROFITS OR LOSS OF USE, OR FOR ANY INCIDENTAL, CONSEQUENTIAL, SPECIAL, DIRECT OR INDIRECT DAMAGES, HOWSOEVER CAUSED. SELLER'S MAXIMUM LIABILITY TO BUYER WITH RESPECT TO THE GOODS OR ANY REPLACEMENT PART SHALL IN NO EVENT EXCEED THE PRICE PAID BY BUYER FOR THE GOODS OR REPLACEMENT PART THAT ARE THE SUBJECT OF THE APPLICABLE CLAIM.

D. Seller shall not be liable for any damage, injury or loss arising out of the use of the Goods or any Replacement Part if, prior to such damage, injury or loss, such Goods or Replacement Parts are: (1) damaged or misused following Seller's delivery to the carrier; (2) not maintained, inspected, or used in compliance with applicable law and Seller's written instructions and recommendations; or (3) installed, repaired, altered or modified (a) with any part or accessory other than those supplied by Seller or (b) without compliance with such laws, instructions or recommendations.

E. This warranty is limited and provided only to the original end-user. Each Good and Replacement Part must be registered within sixty (60) days of receipt of each product to establish eligibility. Please register at www.cmworks.com/hoist-warranty-registration or submit a registration card via US mail.

F. Any action against Seller for breach of warranty, negligence or otherwise in connection with the electrical components of any Good must be commenced by Buyer within one (1) year after (a) the date any alleged claim accrues; or (b) the date of delivery of the Goods to Buyer, whichever is earlier. Any action against Seller for breach of warranty, negligence or otherwise in connection with the mechanical components of any Good must be commenced by Buyer within one (1) year after the date any alleged claim accrues... Any action against Seller for breach of warranty, negligence or otherwise in connection with any Replacement Part must be commenced by Buyer within one (1) year after (y) the date any alleged claim accrues; or (z) the date of delivery of the Replacement Part to Buyer, whichever is earlier.

G. This warranty is contingent upon Buyer's proper maintenance and care of the Goods and/or Replacement Parts, and does not extend to normal wear and tear. Seller reserves the right, at its option, to void this warranty in the event of Buyer's use with the Goods and/or Replacement Parts of parts or accessories other than those supplied by Seller.

⚠ WARNING

Alterations or modifications of equipment and use of non-seller replacement parts can lead to dangerous operation and injury.

TO AVOID INJURY:
- Do not alter or modify equipment.
- Do use only replacement manufactured by seller.

COLUMBUS McKINNON CORPORATION

FAMILY OF BRANDS