NO. REQ.

A	28"	
B	12"	
*C	4 3/4"	
*D	13 3/4"	
*E	1 7/16"	
F	4"	
G	9"	
**H	10 11/16"	
I	1/4"	
J	1 3/4"	Tread width
K	11 11/16"	Flange O.D.
L	9 3/4"	Tread O.D.
M	3 1/4"	
N	1 1/4"	
O	4 5/8"	

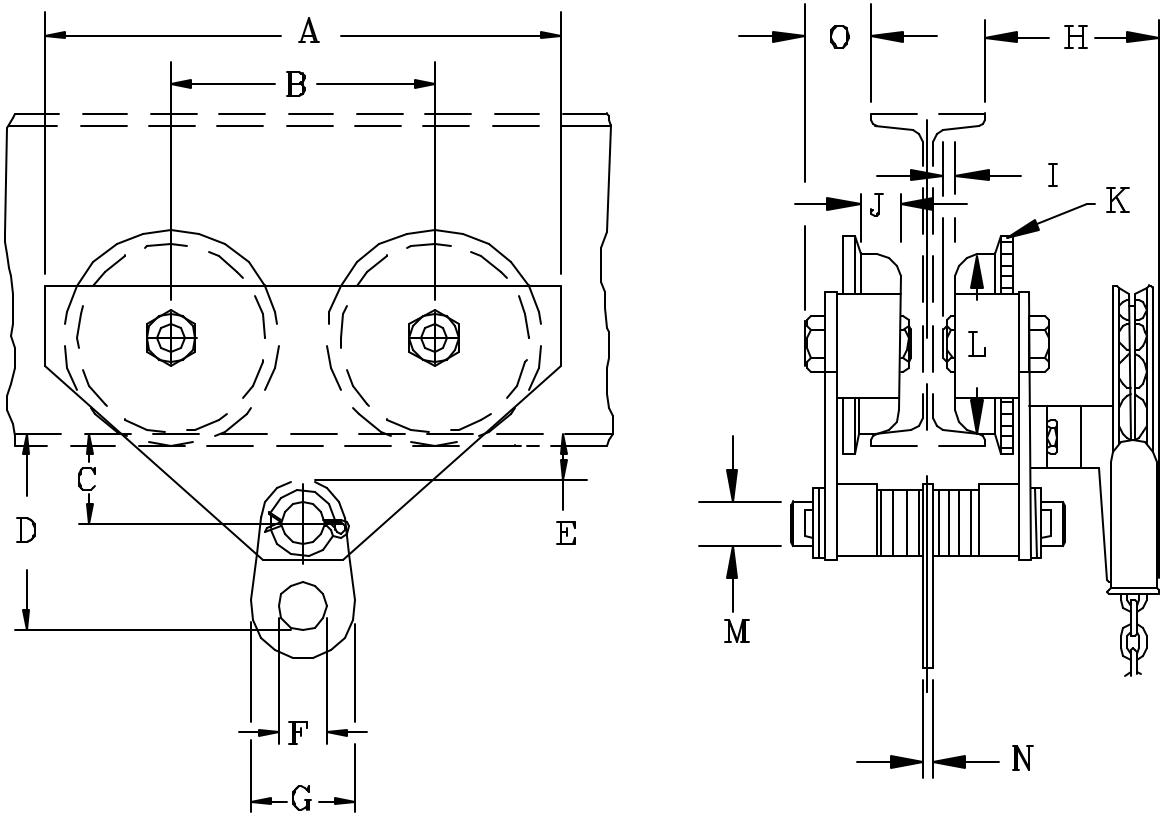

* To wheel running surface of beam.
** "H" applies to geared units only – For plain units o Dim. is the same for both sides of trolley.
THIS UNIT IS ADJUSTABLE FROM 6" – 8", MIN. BEAM HEIGHT 12"
CUSTOMER MUST TAKE INTO CONSIDERATION FLANGE WIDTH AND THICKNESS.

MK.	REVISIONS	CK–DATE

16 TON 1641/1642 TROLLEY

CHESTER HOIST
LISBON, OHIO

DR. RLB	TR.	CK.	AP.
SCALE NONE		DATE	
REF. DWG. NO. 1600–16			

Dwg. No. CD091