NO. REQ. 1

SPARK RESISTANT

-BRONZE WHEELS
-STAINLESS STEEL DROP STOPS
-ALUMINUM HAND CHAIN & HAND CHAIN GUARD

	A 28"	
	B 12"	
*	C 4 3/4"	
*	D 13 3/4"	
*	E 1 1/2"	
	F 4"	
	G 9"	
**	H 9 3/16"	
	I 9/32"	
	J 1 3/4"	Tread Width
	K 11 11/16"	Flange O.D.
	L 9 3/4"	Tread O.D.
	M 3 1/4"	
	N 1 1/4"	
	O 4 9/16"	
^	P 5/8"	Rubber Bumper

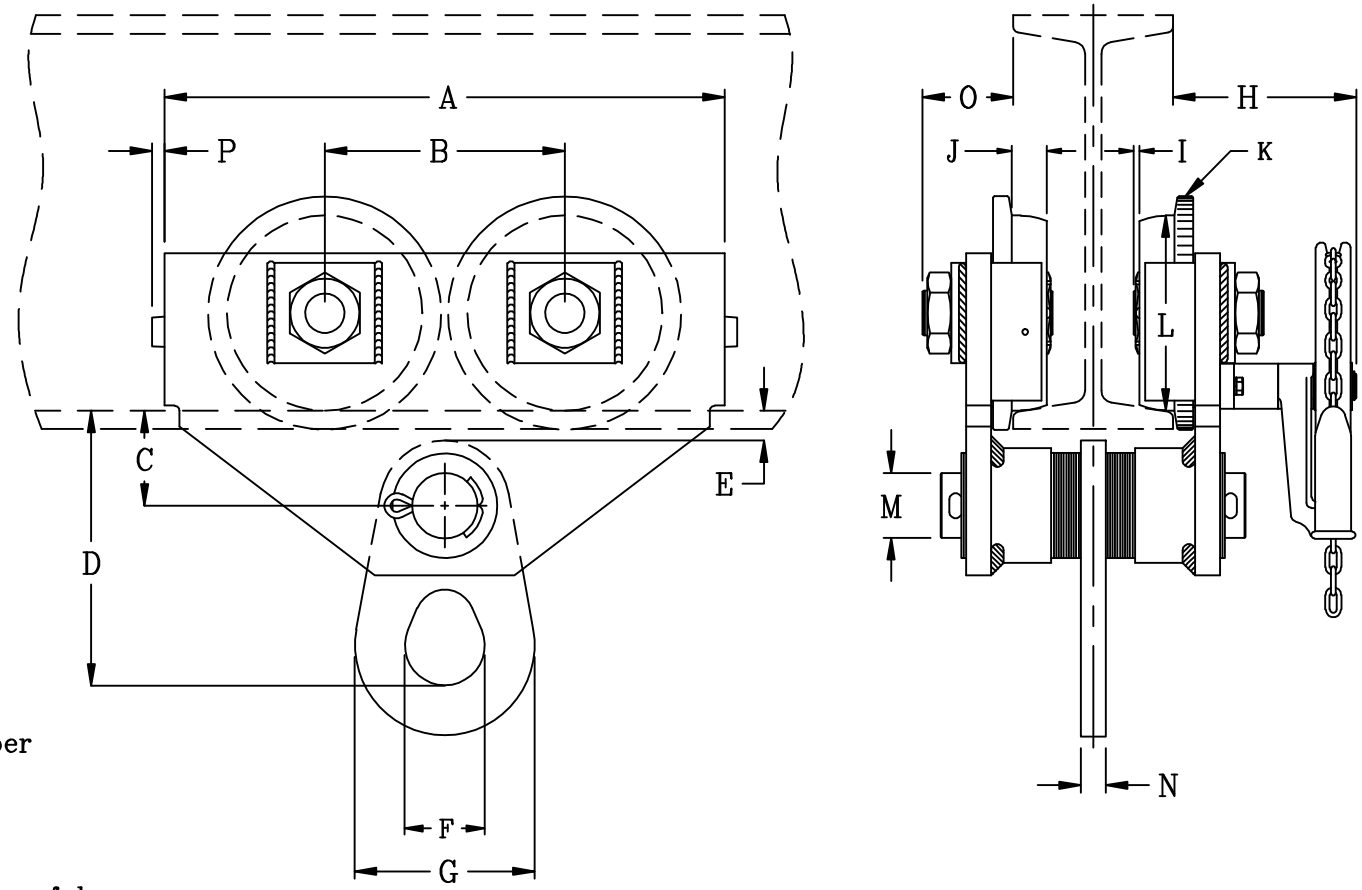

* To wheel running surface of beam.
** "H" applies to geared units only – For plain units "O" dimension is the same for both sides of trolley.
^ "P" applies only to units with removable rubber bumpers
THIS UNIT IS ADJUSTABLE FROM 6"–8", MINIMUM BEAM HEIGHT: 12"
CUSTOMER MUST TAKE INTO CONSIDERATION FLANGE WIDTH AND THICKNESS.

MK.	REVISIONS	CK-DATE

16 TON 1641/1642 TROLLEY

CHESTER HOIST
LISBON, OHIO

DR. MAM	TR.	CK.	AP.
SCALE NONE		DATE 3/2/09	
REF. DWG. NO. 1600-16			
Dwg. No. C-50051			