NO. REQ. 1

SPARK RESISTANT

-BRONZE WHEELS
-STAINLESS STEEL DROP STOPS
-ALUMINUM HAND CHAIN & HAND CHAIN GUARD

	A	15 5/8"
	B	7 5/8"
*	C	2 5/8"
*	D	6 7/8"
*	E	1 1/8"
	F	2 1/4"
	G	4"
**	H	6 1/8"
	J	1 1/8" Tread Width
	K	6" Flange O.D.
	L	4 1/2" Tread O.D.
	M	1 1/2"
	N	1/2"
	O	2 1/8"
^	P	7/16" Rubber Bumper

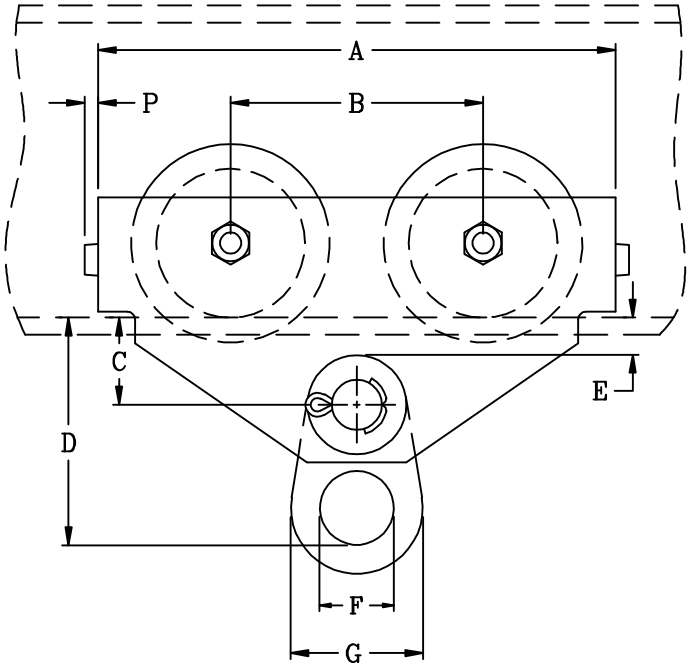

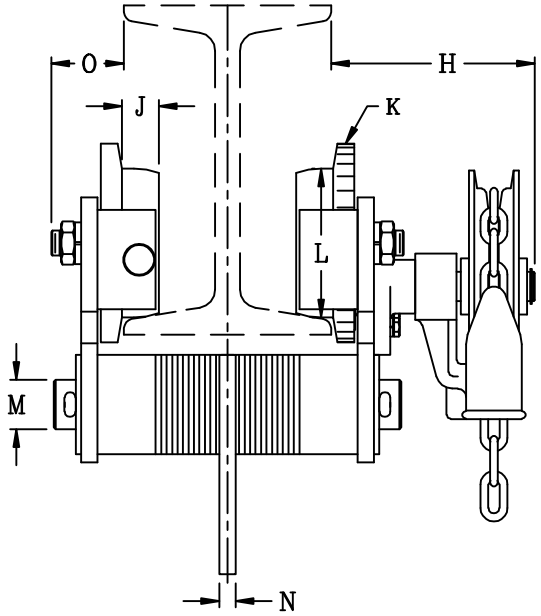

* To wheel running surface of beam.
** "H" applies to geared units only – For plain units "O" dimension is the same for both sides of trolley.
^ "P" applies only to units with removable rubber bumpers
THIS UNIT IS ADJUSTABLE FROM 3.33"–6.25", MINIMUM BEAM HEIGHT: 6"
CUSTOMER MUST TAKE INTO CONSIDERATION FLANGE WIDTH AND THICKNESS.

MK.	REVISIONS	CK-DATE

3 TON 1641/1642 TROLLEY

CHESTER HOIST
LISBON, OHIO

DR. MAM	TR.	CK.	AP.
SCALE NONE		DATE 3/2/09	
REF. DWG. NO. 1600-3			
Dwg. No. C-50046			