NO. REQ. 1

SPARK RESISTANT

-BRONZE WHEELS
-STAINLESS STEEL DROP STOPS
-ALUMINUM HAND CHAIN & HAND CHAIN GUARD

	A	13 1/4"
	B	6 3/4"
*	C	2 1/4"
*	D	5 5/8"
*	E	1"
	F	2"
	G	3 1/4"
**	H	5 1/8"
	J	1 1/8" Tread Width
	K	5" Flange O.D.
	L	3 3/4" Tread O.D.
	M	1 1/4"
	N	3/8"
	O	1 15/16"
^	P	7/16" Rubber Bumper

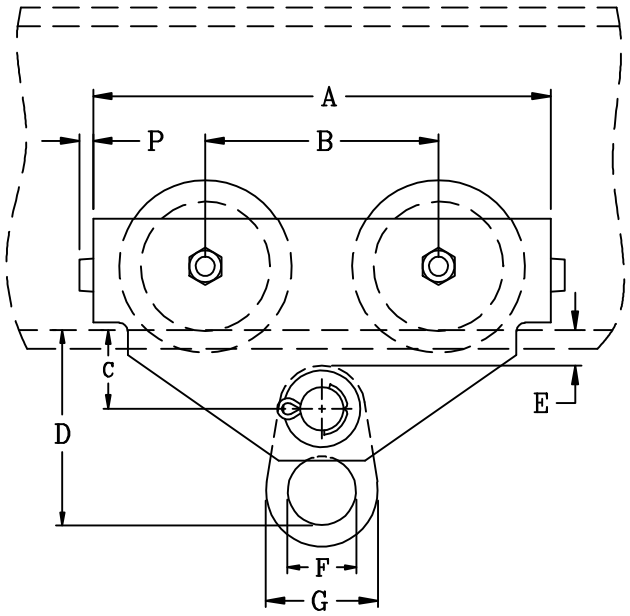

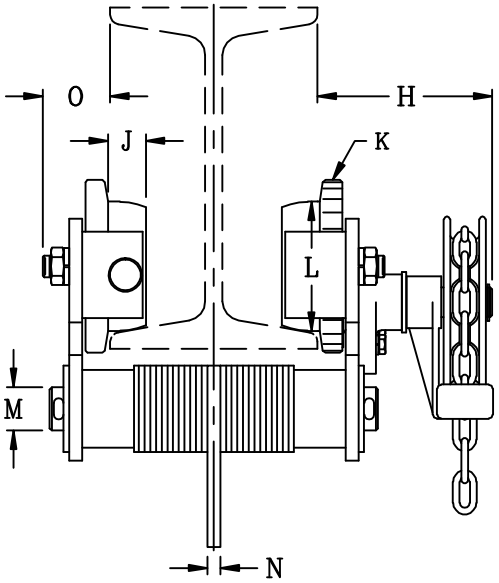

* To wheel running surface of beam.
** "H" applies to geared units only – For plain units "O" dimension is the same for both sides of trolley.
^ "P" applies only to units with removable rubber bumpers
THIS UNIT IS ADJUSTABLE FROM 3"–6", MINIMUM BEAM HEIGHT: 5"
CUSTOMER MUST TAKE INTO CONSIDERATION FLANGE WIDTH AND THICKNESS.

MK.	REVISIONS	CK–DATE

1 1/2 TON 1641/1642 TROLLEY

CHESTER HOIST
LISBON, OHIO

DR. MAM	TR.	CK.	AP.
SCALE NONE		DATE 3/2/09	

REF. DWG. NO. 1600–1–5

Dwg. No. C–50044